SYSTEM-40

BTU Measurement System
Installation and Operation Guide

ONICON
Flow and Energy Measurement

DOC-0002831 Rev.J

SAFETY INFORMATION

This meter was calibrated at the factory before shipment. To ensure correct use of the meter, please read this manual thoroughly.

Regarding this manual:

- This manual should be passed on to the end user.
- Before use, read this manual thoroughly to comprehend its contents.
- The contents of this manual may be changed without prior notice.
- All rights reserved. No part of this manual may be reproduced in any form without ONICON's written permission.
- ONICON makes no warranty of any kind with regard to this material, including, but not limited to, implied warranties of merchantability and suitability for a particular purpose.
- All reasonable effort has been made to ensure the accuracy of the contents of this manual. However, if any errors are found, please inform ONICON.
- ONICON assumes no responsibilities for this product except as stated in the warranty.
- If the customer or any third party is harmed by the use of this product, ONICON assumes no responsibility for any such harm owing to any defects in the product which were not predictable, or for any indirect damages.

SAFETY PRECAUTIONS:

The following general safety precautions must be observed during all phases of installation, operation, service, and repair of this product. Failure to comply with these precautions or with specific WARNINGS given elsewhere in this manual violates safety standards of design, manufacture, and intended use of the product. ONICON Incorporated assumes no liability for the customer's failure to comply with these requirements. If this product is used in a manner not specified in this manual, the protection provided by this product may be impaired.

The following messages are used in this manual:

WARNING

Messages identified as "Warning" contain information regarding the personal safety of individuals involved in the installation, operation or service of this product.

CAUTION

Messages identified as "Caution" contain information regarding potential damage to the product or other ancillary products.

IMPORTANT NOTE

Messages identified as "Important Note" contain information critical to the proper operation of the product.

TABLE OF CONTENTS

SECTION 1.0 INTRODUCTION 5
1.1 PURPOSE OF THIS GUIDE 5
1.2 TYPICAL SYSTEM-40 BTU METER INSTALLATION 5
1.3 STANDARD FEATURES AND SPECIFICATIONS 6
1.4 MODEL NUMBERING CODIFICATION 7
1.5 ADDITIONAL HARDWARE REQUIRED 8
1.6 WORKING ENVIRONMENT 8
1.7 SERIAL NUMBER 8
SECTION 2.0 UNPACKING 8
2.1 CHECKING THAT YOU HAVE RECEIVED EVERYTHING 8
2.2 ADDITIONAL ITEMS 8
SECTION 3.0 INSTALLATION 9
3.1 SITE SELECTION 9
3.2 MECHANICAL INSTALLATION 10
3.3 INSTALLING THE FLOW SENSOR 11
3.3.1 Straight Run Requirements 11
3.3.2 Installing the Flow Meter 11
3.3.3 Installing Meter Couplings 12
3.3.4 Adjustment and Rotation 13
3.3.5 Orientation 14
3.4 INSTALLING THE TEMPERATURE SENSORS 15
3.4.1 Integral Mount Temperature Sensors - Direct Insertion Style 15
3.4.2 Remote Mount Temperature Sensors - Direct Insertion Style 16
3.4.3 Remote Mount Temperature Sensors - Thermowell Style 17
3.5 REMOTE MOUNTING THE ENCLOSURE 18
3.6 POWER AND SIGNAL WIRING CONNECTIONS 18
SECTION 4.0 START-UP AND COMMISSIONING 21
4.1 START-UP 21
4.2 COMMISSIONING 21
4.2.1 Short Commissioning 22
4.2.1.1 Communication Settings – BACnet 22
4.2.1.2 Communication Settings – MODBUS 23
4.2.1.3 Additional Displays 24
4.2.2 Long Commissioning 24
4.2.2.1 Meter Configuration Settings 25
4.2.2.2 Units of Measure 25
4.2.2.3 Auxiliary Input/ Output Configuration Settings 26
4.3 USER SCREEN 28
4.3.1 Single Mode 28
4.4 SEALING THE METER 30
4.3.2 Dual Mode 30

SECTION 5.0 AUXILIARY INPUTS AND OUTPUTS 31
5.1 DETERMINING AUXILIARY INPUTS AND OUTPUTS CONFIGURATIONS 31
5.2 AUXILIARY INPUTS 31
5.3 AUXILIARY OUTPUTS 31
5.3.1 Single Mode Operation Pulse Outputs 31
5.3.2 Dual Mode Operation Pulse Outputs 32
5.4 ANALOG OUTPUT 32
5.5 JUMPER LOCATIONS AND DETAILS 32
SECTION 6.0 TROUBLESHOOTING & OTHER INFORMATION 34
6.1 ALARM 34
6.2 DIAGNOSTICS 36
6.3 MORE TOTALS 37
6.4 METER DATA 38
SECTION 7.0 BACNET MS/TP 39
7.1 BACNET OBJECT TYPES 39
7.2 PROTOCOL IMPLEMENTATION STATEMENT 39
7.3 DEVICE OBJECT 40
7.4 ANALOG INPUT(S) 41
7.5 ANALOG VALUES 42
7.6 BINARY VALUE(S) 43
7.7 MULTI-STATE VALUE 44
7.8 TREND LOG MULTIPLE 45
SECTION 8.0 MODBUS 46
8.1 MODBUS MEMORY MAP 47
8.2 DIAGNOSTIC FUNCTION CODE 54
8.3 REPORT SLAVE ID FUNCTION CODE 55

SECTION 1.0 INTRODUCTION

1.1 PURPOSE OF THIS GUIDE

The purpose of this guide is to provide installation and commissioning procedures, and basic operating and servicing instructions for the ONICON System-40 BTU Meter.

WARNING

Only qualified service personnel should attempt to install or service this product. Serious injury may result from the improper installation or use of this product.

1.2 TYPICAL SYSTEM-40 BTU METER INSTALLATION

Meter may be installed in either supply or return line.

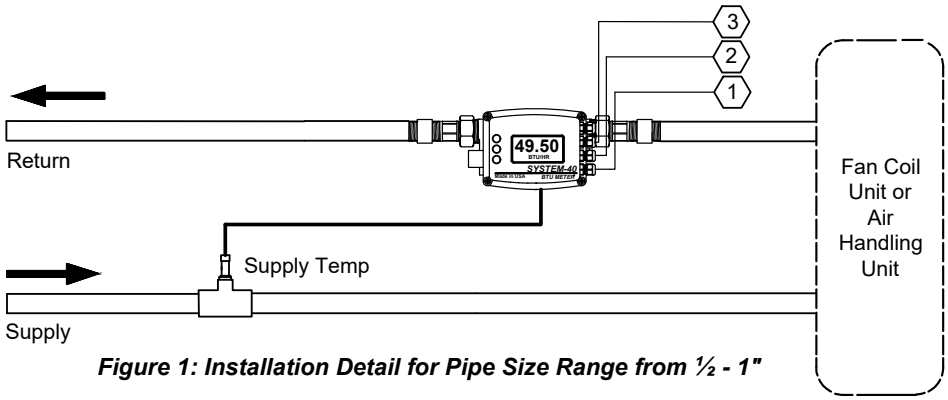

Figure 1: Installation Detail for Pipe Size Range from ½ - 1"

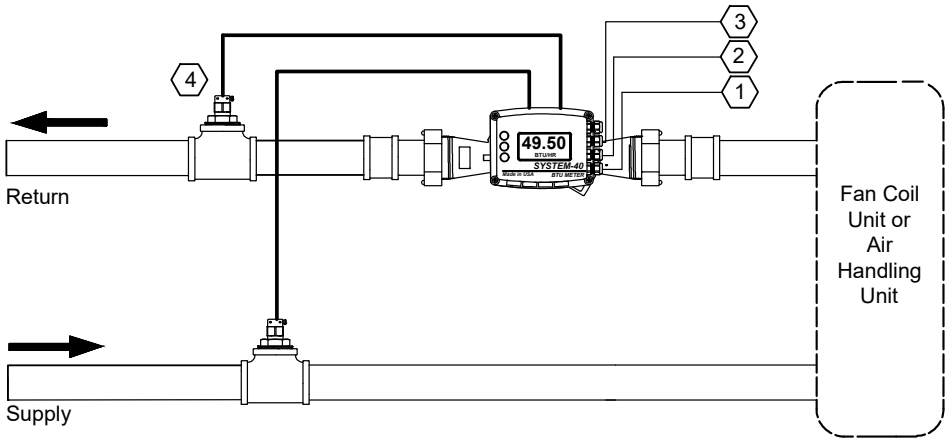

Figure 2: Installation Detail for Pipe Size Range from 1¼ - 2½"

1. Input Power
   20-28V AC/DC, 5 VA maximum
2. Input and output signals
   Three (3) auxiliary signals can be configured as pulse inputs / outputs or as an analog output
3. RS485 BACnet or MODBUS
4. Remote temperature sensor(s), installed downstream of flow meter body

1.3 STANDARD FEATURES AND SPECIFICATIONS*

SYSTEM-40 TRANSMITTER		
PERFORMANCE	CALCULATOR ACCURACY	Meets EN1434 Class 1 requirements with 3K minimum Δt Computation Error: ≤ 0.09% at 30°F Δt
	REPEATABILITY	≤ ±0.2%
OPERATING CONDITIONS	OPERATING TEMPERATURE	-13°F to 131°F
	STORAGE TEMPERATURE	-14°F to 158°F
INPUT POWER	20-28V AC/DC, 50/60 Hz, 5 VA maximum	
I/O SIGNAL	AVAILABLE OPTIONS	• Two (2) aux pulsed inputs & one (1) aux pulsed output • One (1) aux pulsed input, one (1) aux pulsed output & one (1) analog output
	ISOLATED ANALOG OUTPUT	May be programmable for energy rate, flow rate, supply temperature, return temperature or Δt Configurable: 4-20 mA, 0-5 V or 0-10 V output
	ISOLATED TOTALIZING SOLID STATE CONTACT CLOSURE PULSE OUTPUTS	May be programmed for energy, volume, alarm indication, mode indication or MODBUS coil indication Contact Rating: 50 mA, 30 V Contact Pulse Duration: 50, 100, 500 or 1000 ms
	ISOLATED TOTALIZING PULSE INPUTS	For use with devices providing sinking open collector or dry contact outputs Input Rating: 30 VDC, 10 mA maximum Pulse Duration: 50 ms minimum
ELECTRONICS ENCLOSURE	IP65 polycarbonate with display	
	WETTED COMPONENTS	Lead-free brass, PEEK
NETWORK CONNECTIONS	Isolated RS485 serial interface	
	AVAILABLE OPTIONS	• BACnet® MS/TP per ASHRAE Standard 135.1: 2009 • MODBUS® RTU
NETWORK CONFIGURATION & ADDRESSING	BAUD RATES	4800, 9600, 19200, 38400, 76800, or 115200
	DEVICE ADDRESS RANGE	1 – 127 (1 - 247 MODBUS® RTU)
	DEVICE INSTANCE RANGE	1 – 4,194,302 (BACnet® only)
	PARITY	None, Even, Odd (MODBUS® RTU only)
APPROVALS	FCC	Part 15, Subpart B
	BTL	Certified to ASHRAE 135:2009
SYSTEM-40 FLOW SENSOR		
PERFORMANCE	SENSING METHOD	Inline wetted ultrasonic sensing (no moving parts)
	ACCURACY	±1% of reading over 25:1 turndown ±2% of reading over 100:1 turndown Overall turndown exceeds 500:1 Meets EN1434 Class 1 accuracy requirements
OPERATING CONDITIONS	Meets EN1434/C900.1 Class A requirements	
	FLUID TEMPERATURE	32°F to 250°F
	MAXIMUM OPERATING PRESSURE	400 psi
	PRESSURE DROP	Less than 1 psi at 4 ft/s, decreasing at lower velocities
TEMPERATURE SENSORS	Field serviceable MID certified matched pair of 2-wire 1000Ω platinum RTDs Calibrated to a differential measurement uncertainty of ±0.18°F Meets EN1434/C900.1 accuracy requirements for 3K sensors	

*Specifications subject to change without notice.

1.3 STANDARD FEATURES AND SPECIFICATIONS (CONTINUED)*

PIPE SIZE RANGE	½ - 2½" nominal diameter	
PROCESS CONNECTIONS	AVAILABLE OPTIONS	• Male NPT threads • 2½" meter provided with ANSI Class 150 raised face flanges
APPROVALS	NSF/ANSI	61
	NSF/ANSI	372

*Specifications subject to change without notice.

1.4 MODEL NUMBERING CODIFICATION

Meter Model Number Coding = SYS-40-AAA-BCD-EFG

SYS-40 = Integral BTU Meter

AAA = Nominal Meter Size in Inches

050 = ½"
340 = ¾"
341 = ¾" High Flow
010 = 1"
011 = 1" High Flow
130 = 1¼"
150 = 1½"
020 = 2"
250 = 2½"

B = Process Connection Type

0 = NPT Threads
1 = ANSI Class 150 flange[1]

C = Display/Interface

1 = IP65 enclosure with display

D = Input Power

0 = 24 V AC/DC

E = Serial Communications

1 = RS485 (BACnet MS/TP or MODBUS RTU)

F = Analog & Pulse Input/Output Configuration

2 = Two (2) aux pulse inputs and one (1) aux pulse output[2]
6 = One (1) aux pulse input, one (1) aux pulse output, and One (1) analog output

G = Temperature Sensor Type

0 = Threaded RTDs w/gaskets for direct insertion (wetted sensors) - One (1) integral, one (1) remote[3]
1 = Threaded RTDs for use with thermowells – Two (2) remote[4]
2 = Push-in RTDs for use with thermowells – Two (2) remote[5]

[1] Required for 2½" meter, NOT available on ½" to 2" meters

[2] Default configuration, pulse inputs and outputs can be configured in the field

[3] Valid for "AAA" meter size = 050-011. Requires reducer bushing INSTL4002-TSI or INSTL4004-TSI

[4] Valid for "AAA" meter size = 050-011. Requires thermowell INSTL kit INSTL4001-TSD or INSTL4003-TSD

[5] Valid for "AAA" = 050-250. Requires thermowell INSTL kit INSTL4005-TSD, INSTL4007-TSD, INSTL4008-TSD or INSTL4009-TSD

1.5 ADDITIONAL HARDWARE REQUIRED

ONICON'S System-40 is a true heat (BTU) computer, which accepts data from several sensors, performs a series of computations with that data, and displays and/or transmits the results as an indication of the amount of heat (BTU) being transferred per unit time or as a totalized amount.

For direct insertion style meters, a customer supplied line size threaded tee is required. The kit is ordered with the meter to install the remote temperature sensor.

For remote style meters, two tees are required. The tees are used with the two ½" NPT thermowells ordered with the meter. 2½" meters are provided with raised face flanges. Mating flanges, flange gaskets and mounting hardware are required to complete the installation.

1.6 WORKING ENVIRONMENT

The System-40 was designed for installation and use indoors in residential, commercial and light industrial environments that are free of corrosive liquids and fumes, temperature extremes and excess vibration. It may be installed outdoors in protected spaces away from direct sunlight and rain, sleet or snow.

The operating ambient air temperature range is -13°F to 131°F. Electrical power should be clean, free of excess high frequency noise and large voltage transients.

1.7 SERIAL NUMBER

The serial number is a unique identifier for the product, located on the side of the enclosure. Please have this number available when contacting ONICON for assistance.

SECTION 2.0 UNPACKING

The System-40 BTU Meter is generally shipped in one package unless optional hardware or equipment is ordered. Notify the freight carrier and ONICON if any items are damaged in transit.

2.1 CHECKING THAT YOU HAVE RECEIVED EVERYTHING

The following items are normally provided with the System-40 BTU Meter:

- Two (2) line size process connection meter couplings with male NPT threads and sealing gaskets (shipped attached to meter)
- One (1) System-40 Installation and Operation Guide
- One (1) System-40 Certificate of Calibration

Please notify ONICON if any of these items are missing.

2.2 ADDITIONAL ITEMS

The following items are purchased from ONICON at the time that the meter is ordered.

- One (1) line size NPT (or copper sweat) x M10 bushing for the remote temperature sensor OR two (2) thermowells with ½" male NPT threads

SECTION 3.0 INSTALLATION

The System-40 BTU Meter should be installed by experienced contractors with related knowledge and experience in hydronic heating and cooling systems, and fluid metering applications in general. Contact ONICON for installation assistance.

The installer should use good trade practices and must adhere to all state and local building or other applicable codes.

Before you begin, clean the external surfaces of all pipes at the installation sites so that they are free of debris, foreign matter, solids, leak inhibitors, and chemically aggressive substances. Flush the entire system so that it is free of flux, solder, pipe, tube cuttings or any other free moving debris.

3.1 SITE SELECTION

Careful attention to the site selection for the system components will help the installers with the initial installation, reduce start-up problems, and make future maintenance easier.

When selecting a site for mounting the system components, consider the criteria under Section 1.6: WORKING ENVIRONMENT, as well as the following limitations that apply to the installation of the meter:

- The flow sensor body must be correctly oriented with respect to the direction of flow in the pipe. Meters installed with reversed flow will not function.
- The System-40 is provided with fixed cable lengths for the flow sensor and temperature sensors. Do not alter the cable lengths. Doing so will void the calibration and may invalidate the warranty.
- The maximum operating pressure for the flow sensor body, the direct insertion temperature sensors, the temperature sensor adapter bushings and the thermowells is 400 psi.

IMPORTANT NOTE

Proper site selection is critical to the performance of this BTU meter. Both the flow sensor and the remote temperature sensor must be properly located within the piping system in order to ensure an accurate energy measurement.

3.2 MECHANICAL INSTALLATION

½ - 1" METER DIMENSIONS

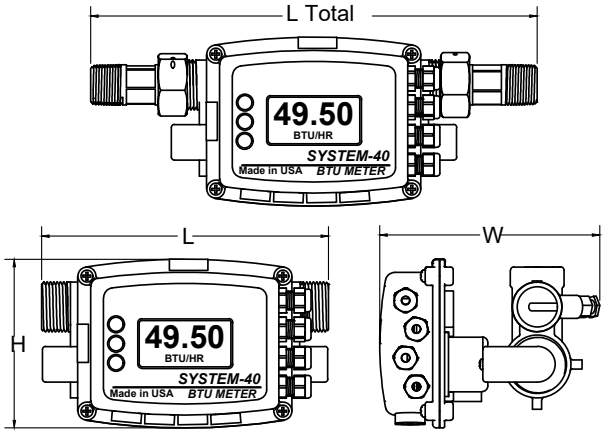

Size	L Total	L	W	H
½"	11.2"	7.48"	5.75"	4.50"
¾"	11.7"	7.48"	5.75"	4.50"
¾" high flow	11.7"	7.48"	5.75"	4.50"
1"	12.3"	10.23"	5.75"	4.50"
1" high flow	15.00"	10.23"	5.75"	4.50"

1¼ - 2½" METER DIMENSIONS *

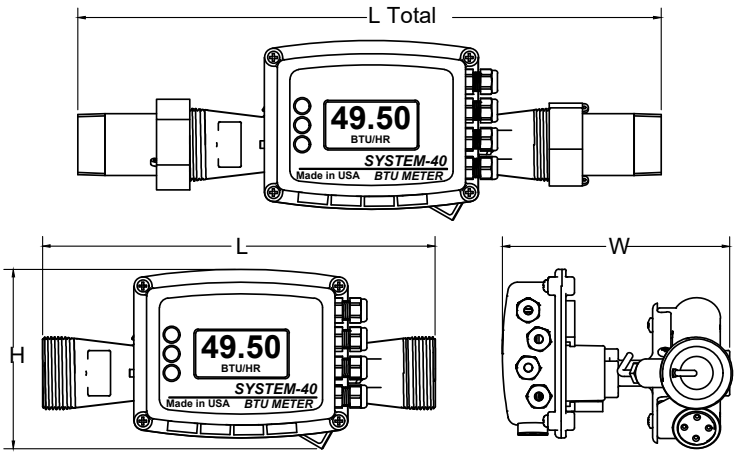

Size	L Total	L	W	H
1¼"	15.25"	10.20"	5.75"	4.50"
1½"	17.00"	11.80"	6.25"	5.00"
2"	17.60"	11.80"	6.50"	5.50"
2½" *	11.81"	10.23"	8.75"	7.00"

** 2½" meter provided with flanged connections*

3.3 INSTALLING THE FLOW SENSOR

When properly installed, the flow sensor will only measure flow associated with that portion of the piping system for which the energy measurement is being made. The flow sensor may be installed in either the supply or return pipe of the heat exchange circuit. Please refer to the table below when selecting the installation location. Upstream straight unobstructed pipe requirements vary considerably based on the nature of the upstream obstructions. ONICON always recommends that the sensor be located with as much straight pipe upstream as possible.

3.3.1 Straight Run Requirements

Upstream Obstruction	Minimum Upstream Straight Run Required (Pipe Diameters)	
	Meter Size	
	½ - 1"	1¼ - 2½"
Single Elbow	0	0
Expander/Reducer	0	2
Coil, Upstream	3	3
Isolation Valve, 2 Position	3	5
Control Valve	10	15
Notes:		
1	Straight run is based on use of manufacturer provided couplings	
2	Avoid the following obstructions where possible: Modulating valves, pump discharge, multiple elbows out of plane.	

3.3.2 Installing the Flow Meter

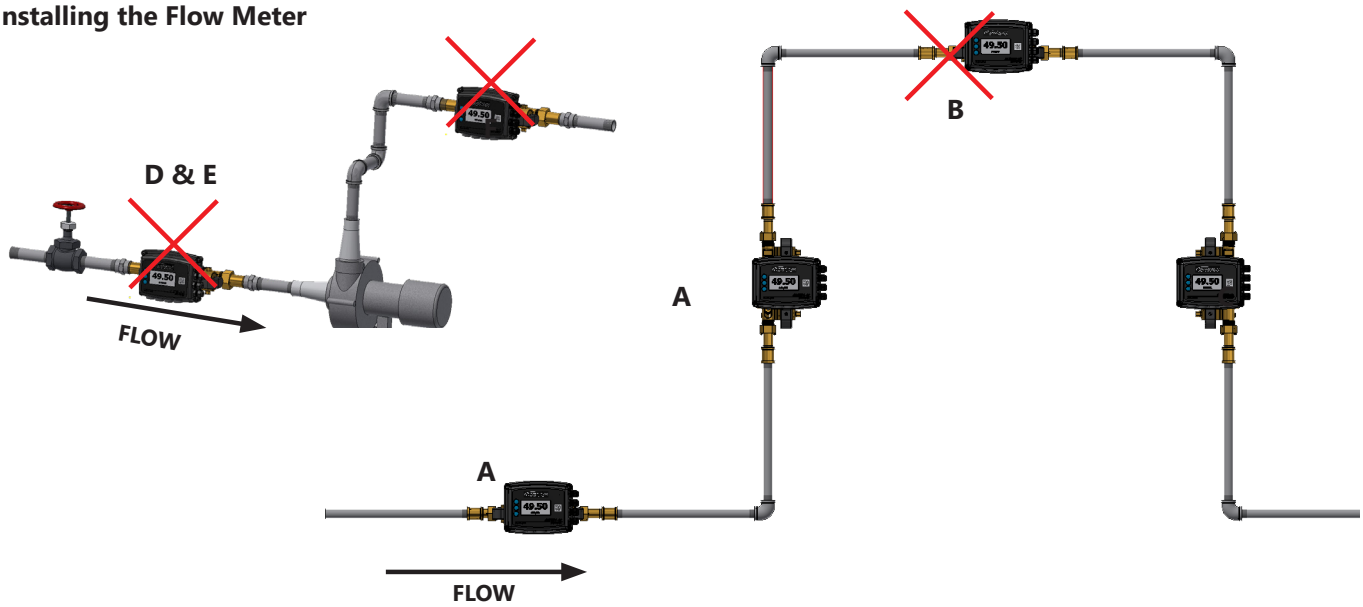

A. This is a recommended position for the flow sensor.
B. Avoid installation locations where air can become trapped in the piping system.
C. This is an acceptable installation location for closed loop pressurized systems.
D. Do not install the sensor downstream of modulating valves or partially open valves. Fully open isolation valves (e.g. ball valves) are acceptable.
E. Do not install the sensor at the inlet of a pump. To prevent cavitation, the minimum operating pressure at the inlet of the meter must always exceed the pressure drop across the sensor.
F. Avoid installing the sensor downstream of multiple bends out of plane where there are less than 10 diameters of straight unobstructed pipe between bends.

3.3.3 Installing Meter Couplings

The flow sensor is installed with threaded meter couplings and flat sealing gaskets as shown below. Orient the sensor body by aligning the flow direction arrow with the direction of flow in the pipe.

Meter Sizes ½" To 1"

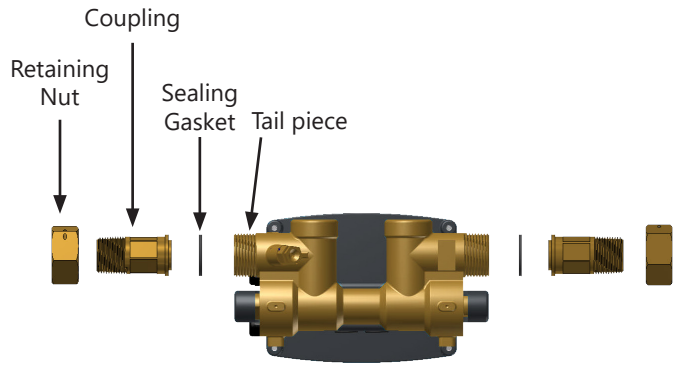

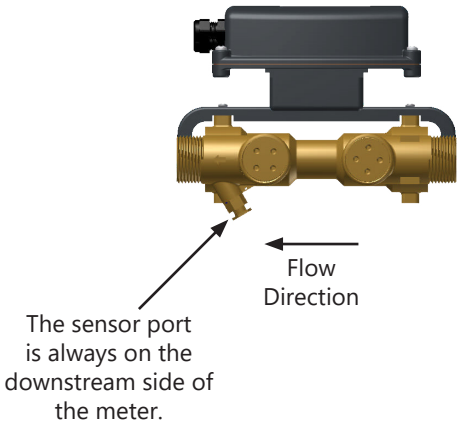

Meter Sizes 1¼" to 2"

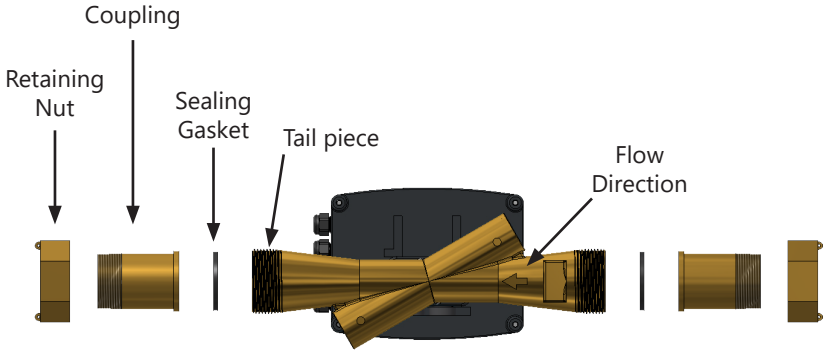

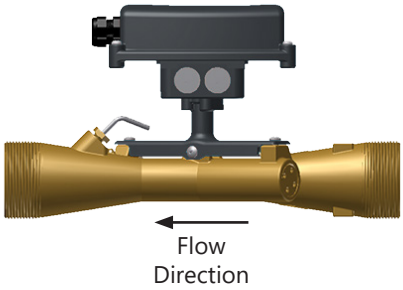

INSTRUCTIONS

- Inspect seating surfaces on the meter's body and tail pieces prior to assembly. Surfaces should be clean and free of any burs or markings.
- Install gasket in tail piece. Thread union onto meter's body by hand until gasket and mating surfaces make first contact. Mark coupling nut and tail piece.
- Place a corresponding mark on the coupling nut, # of degrees (based on table on the following page) counter clockwise. Hold meter body while rotating coupling nut clockwise until marks line up. DO NOT over-tighten.
- Repeat process on opposite side of flow meter body.

  NOTE: Torque setting is not an accurate means of gaging compression on gasket due to the lack of resilience in the gasket material.
- Pressurize system and check for leaks. If any leak is present, DO NOT over-tighten. Relieve pressure and loosen coupling nuts. Remove and inspect the gasket for damage. Repeat installation process.

3.3.3 Installing Meter Couplings (continued)

Model	Meter Size	Min. Compression	Min. Turn Past Initial Contact	Degrees of Rotation
SYS-40-050	½″	30%	1/2	180°
SYS-40-340	¾″	30%	1/3	120°
SYS-40-341	¾″ high flow	30%	1/3	120°
SYS-40-010	1″	30%	2/5	140°
SYS-40-011	1″ high flow	30%	2/5	140°
SYS-40-130	1¼″	30%	2/5	140°
SYS-40-150	1½″	30%	4/9	160°
SYS-40-020	2″	30%	1/2	180°

3.3.4 Adjustment and Rotation

For ½″ – 1″ meter sizes, the enclosure may be rotated around the axis of the flow sensor into three different positions. To rotate, slide the enclosure off the flow sensor mounting brackets, remove the two retaining screws and reposition the mounting brackets as required. Reinstall the enclosure with the display properly oriented for viewing. Mounting tracks on the back of the enclosure allow for mounting in any orientation.

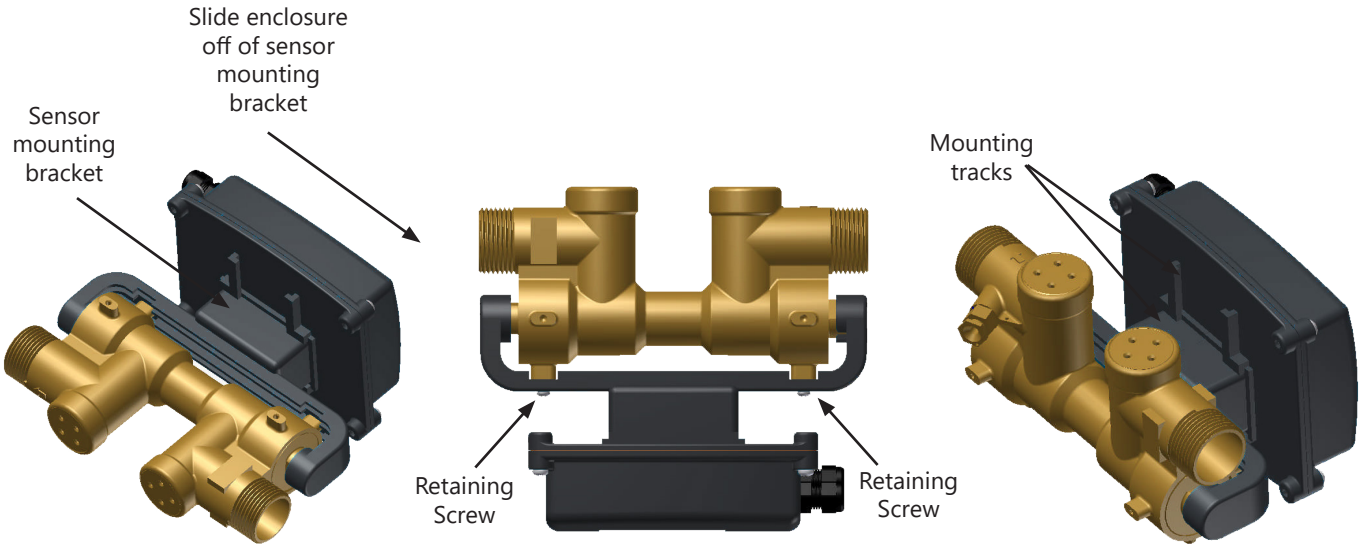

IMPORTANT NOTE

When installing the meter in a vertical pipe with upward flow, you must rotate the enclosure back plate 180° when rotating the display 90°. To accomplish this, temporarily remove the four cover screws and rotate the backing plate.

3.3.5 Orientation

Orient the ½" - 1" meters as shown below. The meter may be installed with upward or downward flow in vertical pipes in closed loop pressurized systems. Avoid any installation locations where the pipe may not be completely full.

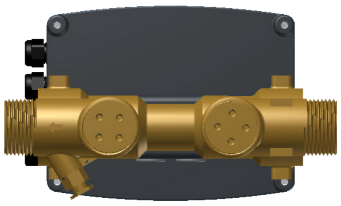

Back View

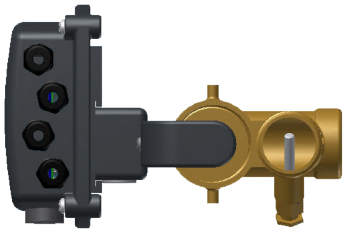

Side view

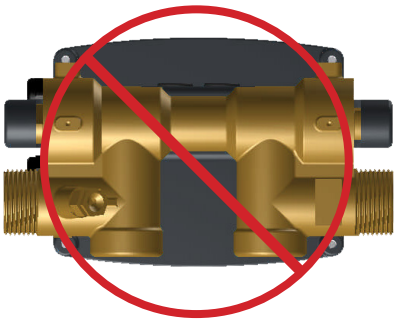

Side view

Orient the 1¼" - 2½" meters as shown below. The meter may be installed with upward or downward flow in vertical pipes in closed loop pressurized systems. Avoid any installation locations where the pipe may not be completely full.

The flow sensor is installed with threaded meter couplings and flat sealing gaskets as shown below. Orient the sensor body by aligning the flow direction arrow with the direction of flow in the pipe.

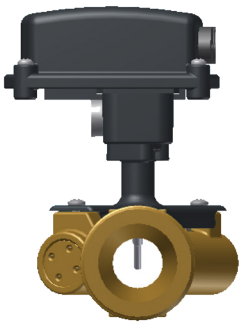

Side View

Front view

Side view

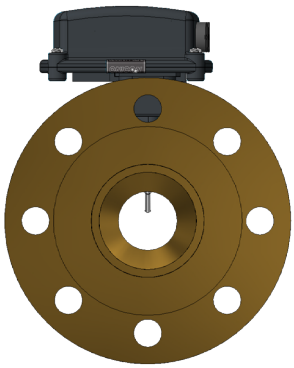

Side View

Front view

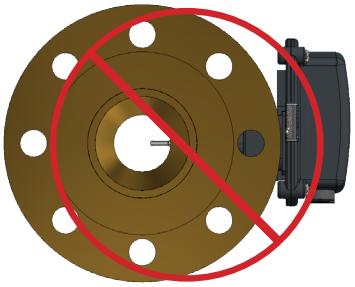

Side view

IMPORTANT NOTE

Do not orient meters as shown above where air can become trapped in the piping system.

3.4 INSTALLING THE TEMPERATURE SENSORS

When properly installed, the temperature sensors will only measure the inlet and outlet temperatures of the heat exchange circuit where the energy measurement is being made. Before you install thermowells or direct insertion sensors, the entire piping system should be flushed and free of debris.

3.4.1 Integral Mount Temperature Sensors - Direct Insertion Style

½ - 1" System-40 BTU Meters configured with direct insertion style are provided with one sensor pre-installed in the flow sensor body. The second sensor must be installed in the pipe opposite that of the flow sensor. The tapered sensors are provided with an M10 threaded fitting and a flat sealing gasket. For standard installations, an M10 x NPT (or flush) bushing is provided for use with a customer supplied line size tee. The torque required to properly install the temperature sensors is 4 lb/ft.

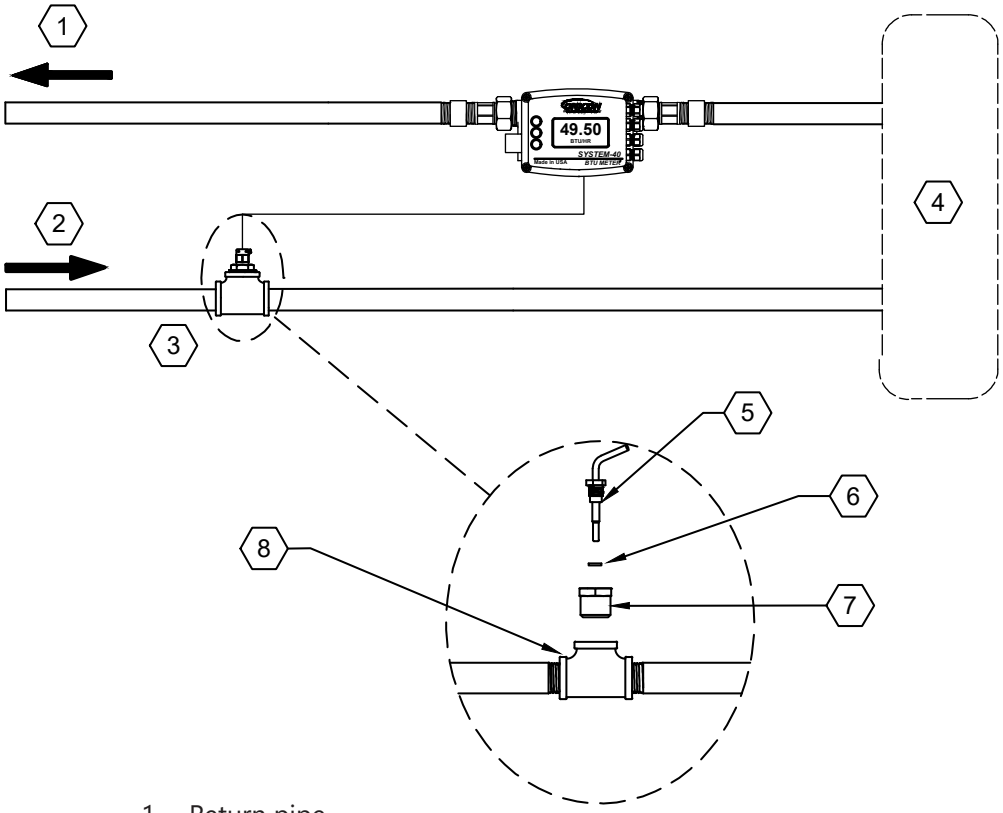

1. Return pipe
2. Supply pipe
3. Temperature sensor installation kit
4. Fan coil unit or air handling unit
5. RTD temperature sensor - provided by ONICON
6. Sealing gasket - provided by ONICON
7. M10 x NPT bushing OR flush busing - purchased from ONICON
8. Customer supplied line size tee

CAUTION

The platinum RTD sensors provided with the System-40 are calibrated with the attached cables. Altering these cable lengths will result in significant measurement errors and void the meter calibration.

3.4.2 Remote Mount Temperature Sensors - Direct Insertion Style

½ - 1" System-40 BTU Meters configured with direct insertion style, provided with two threaded thermowells (or copper sweat thermowells) for use with customer supplied line size tees.

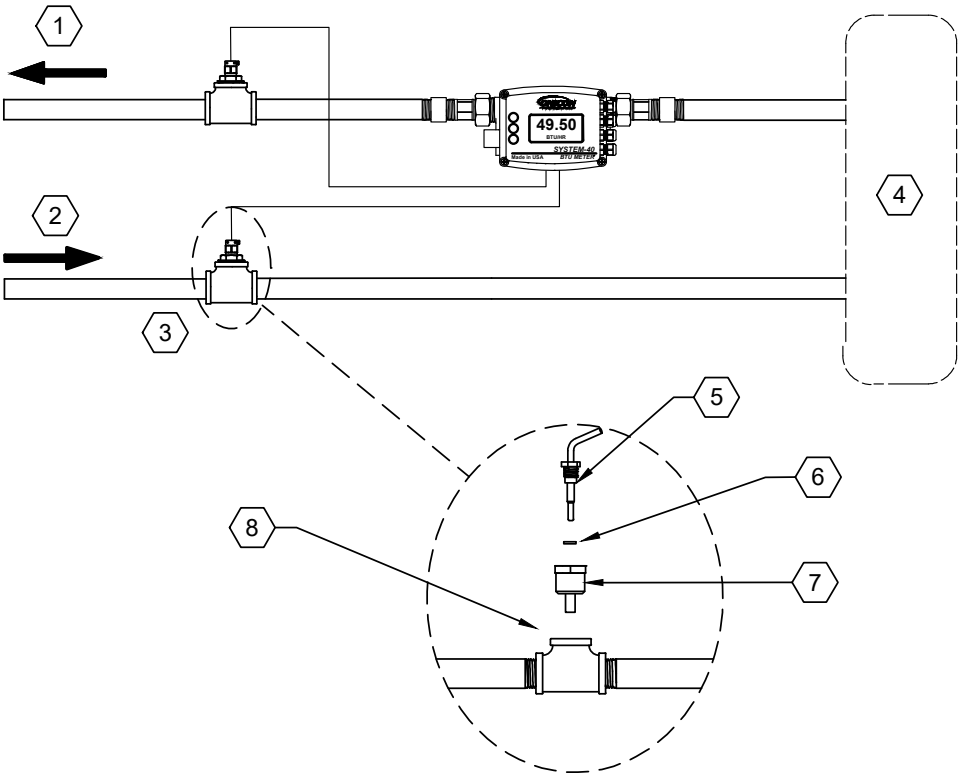

1. Return pipe
2. Supply pipe
3. Temperature sensor installation kit
4. Fan coil unit or air handling unit
5. RTD temperature sensor - provided by ONICON
6. Sealing gasket - provided by ONICON
7. Threaded thermowell OR copper sweat thermowell - purchased from ONICON
8. Customer supplied line size tee

CAUTION

The platinum RTD sensors provided with the System-40 are calibrated with the attached cables. Altering these cable lengths will result in significant measurement errors and void the meter calibration.

3.4.3 Remote Mount Temperature Sensors - Thermowell Style

½ - 2½" System-40 BTU Meters are provided with two thermowells with ½" NPT process connections. The temperature sensors are installed in the threaded thermowells, for push-in style. They are held in placed with a set screw.

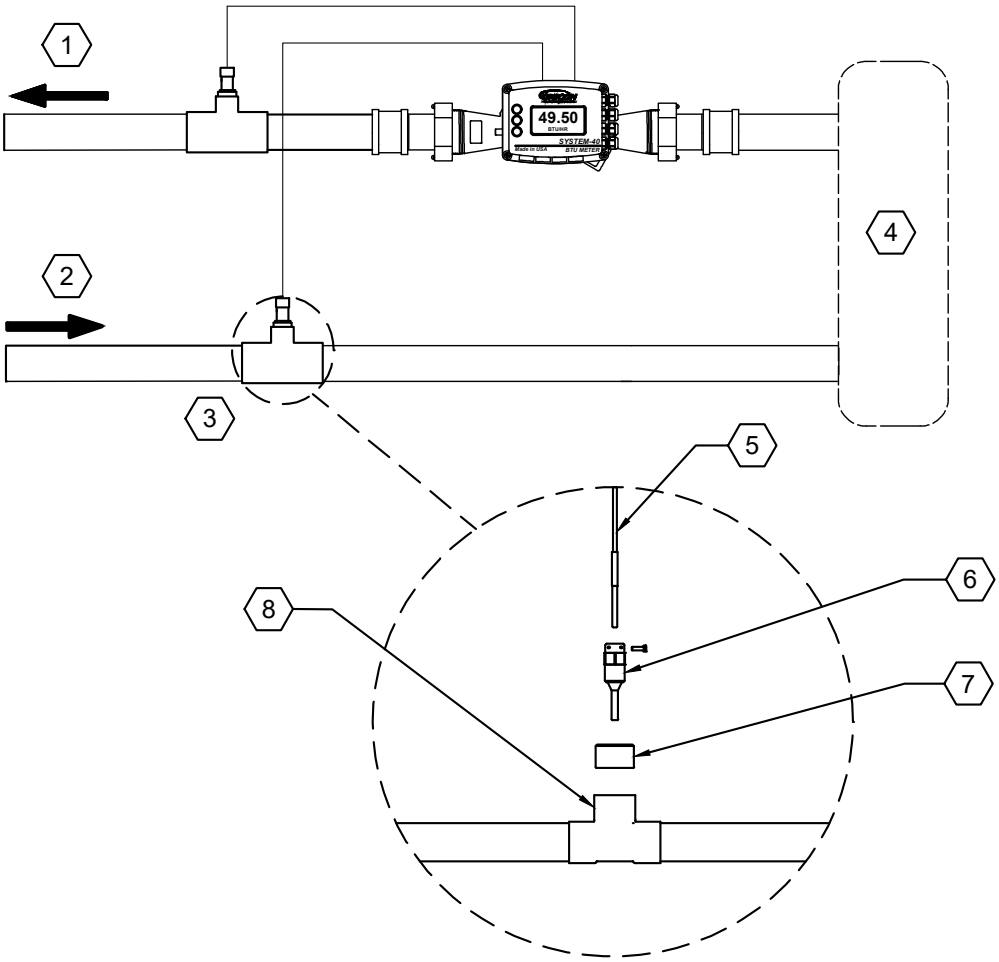

1. Return pipe
2. Supply pipe
3. Remote temperature sensor installation kit
4. Fan coil unit or air handling unit
5. RTD temperature sensor - provided by ONICON
6. Thermowell - purchased from ONICON
7. Customer supplied 1" solder x ½" NPT bushing OR line size x ½" bushing
8. Customer supplied line size tee

CAUTION

The platinum RTD sensors provided with the System-40 are calibrated with the attached cables. Altering these cable lengths will result in significant measurement errors and void the meter calibration.

3.5 REMOTE MOUNTING THE ENCLOSURE

The System-40 is provided with a mounting bracket and the cables required for remote mounting the enclosure. The cable lengths must not be altered. It has two mounting holes designed for #10 screws. The remote mounting bracket also has parallel slots that allow for the use of pipe clamps when mounting the enclosure on a stanchion or pipe. The bracket may be used as a template for marking hole locations. Also shown is the back of the enclosure. The mounting bracket slides onto tracks on this back plate.

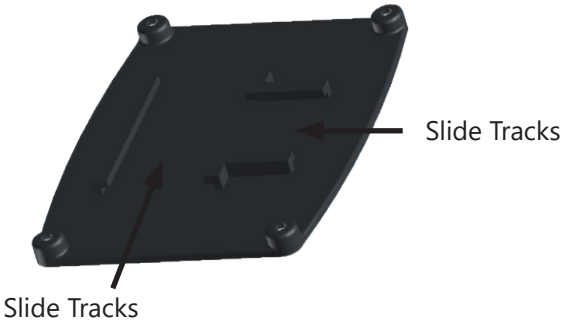

3.6 POWER AND SIGNAL WIRING CONNECTIONS

The System-40 is provided with four glands on the right side of the enclosure for power and signal cables. Each includes a strain relief for securing the cabling and a sealing cap. The power cable should enter the enclosure through the bottom gland. Do not remove the sealing caps from unused cable glands.

IMPORTANT NOTE

Open isolation valves, leak test and purge the piping system of air prior to wiring the meter.

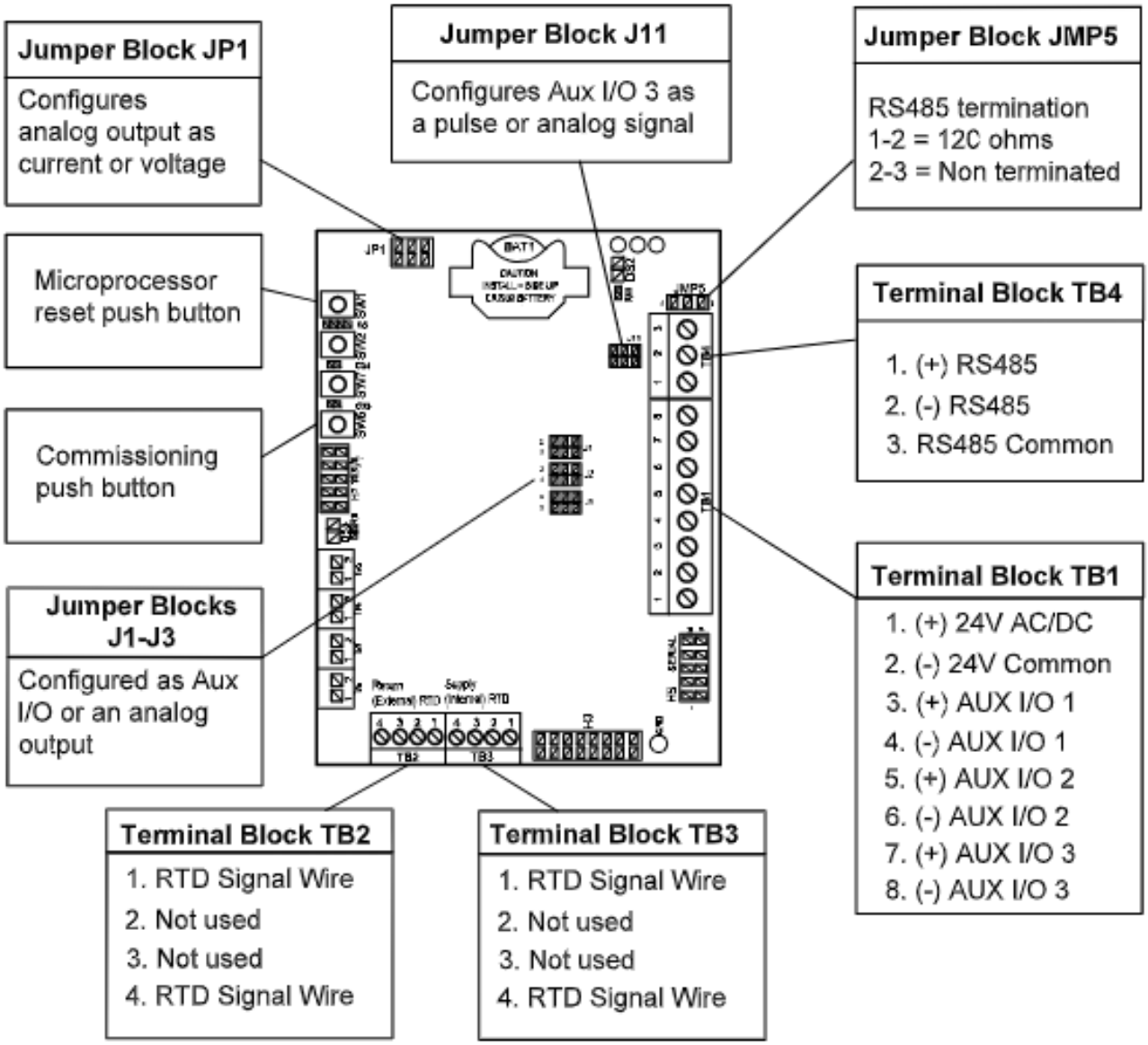
Jumper Block JP1
Configures analog output as current or voltage
Jumper Block J11
Configures Aux I/O 3 as a pulse or analog signal
Jumper Block JMP5
RS485 termination
1-2 = 120 ohms
2-3 = Non terminated
Microprocessor reset push button
Commissioning push button
Jumper Blocks J1-J3
Configured as Aux I/O or an analog output
Terminal Block TB4
1. (+) RS485
2. (-) RS485
3. RS485 Common
Terminal Block TB1
1. (+) 24V AC/DC
2. (-) 24V Common
3. (+) AUX I/O 1
4. (-) AUX I/O 1
5. (+) AUX I/O 2
6. (-) AUX I/O 2
7. (+) AUX I/O 3
8. (-) AUX I/O 3
Terminal Block TB2
1. RTD Signal Wire
2. Not used
3. Not used
4. RTD Signal Wire
Terminal Block TB3
1. RTD Signal Wire
2. Not used
3. Not used
4. RTD Signal Wire

3.6 POWER AND SIGNAL WIRING CONNECTIONS (CONTINUED)

WARNING
A short can exist if multiple System-40 BTU Measurement Systems are powered by one transformer. This could permanently damage the meters. To avoid this, all of the same legs of the transformer must be connected to all the positive (+) inputs of the meters, and the other legs must be connected to all the negative (-) inputs.

If one leg of the transformer is earth grounded, that should be connected to the negative (-) input. Refer to the below diagram for an example of a correct hook up.

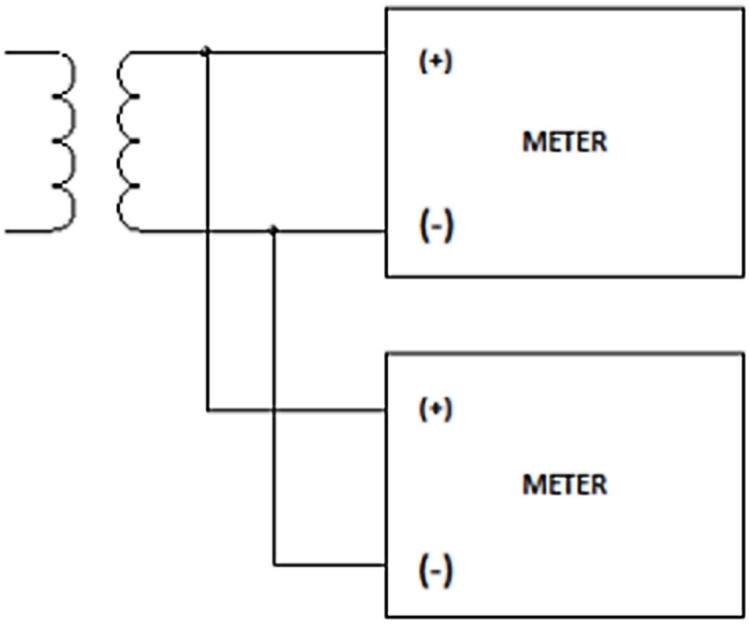

Correct Connection of Multiple Meters

SECTION 4.0 START-UP AND COMMISSIONING

4.1 START-UP

When power is first applied to the meter, the display will be illuminated, and the following start screen will appear. Use the three pushbuttons on the left side of the display to navigate the display pages and change settings.

Pressing **NEXT**, then **SEL** (select) will allow you to navigate the **Main Menu** display.

```
        User Screens        !
        Commissioning
NEXT

SEL
```

Main Menu

User Screens – provide read-only information of the default meter configuration, prior to meter commissioning, and meter run mode information after commissioning. See section 4.3 USER SCREENS for additional information.

Commissioning Screens – provide writeable display pages that allow the user to properly configure the meter for the specific system and application in which it's being installed.

4.2 COMMISSIONING

The System-40 BTU Meter is pre-programmed based on the specific application and its' pipe size. The setting shown on the next page allows the installer to commission the meter. Commissioning the meter is a two part process:

Part 1 Mechanical installation

- ❑ Confirm that the flow sensor is properly located in the piping system (Sec. 3.1 & 3.3).
- ❑ Confirm that the flow sensor is properly oriented with respect to flow direction (Sec. 3.3.5).
- ❑ Confirm that the temperature sensor(s) is properly located in the piping system (Sec. 3.4).

Part 2 Programming

- ❑ Confirm that the flow sensor location in the piping system (supply or return) is programmed into the meter (Sec. 4.3).
- ❑ Verify if the Serial Communication Setting (BACnet or MODBUS) in the meter are correct (Sec. 4.2.1)
- ❑ Verify that the Units of Measure Settings in the meter are correct (Sec. 4.2.2).
- ❑ Confirm that there are no alarm indications and the meter is functional (Sec. 6.0).

4.2.1 Short Commissioning

Short Commissioning allows the installer to set MODBUS or BACnet parameters, the flow sensor location (supply or return pipe), the date and time.
From the main menu, press **NEXT** to position curser at **Commissioning**, and **SEL** (select) to enter.

```
        User Screens      !
        Commissioning
NEXT
SEL
```

Press **NEXT** to continue commissioning the meter or **EXIT** to complete the installation and return to the main menu.

```
EXIT    Set Meter
NEXT    PRESS NEXT to complete
        install or adjust settings
```

4.2.1.1 Communication Settings – BACnet

To select BACnet, press **EDIT**, then **MORE**. To continue, press **SAVE** and then **NEXT**.

```
EXIT    Protocol
NEXT                    BACnet
EDIT
```

BACnet address (MAC address) range: 0 – 127 (Default: 017). Press **EDIT**, then **MORE** to select digits. To continue, press **SAVE** and then **NEXT**.

```
EXIT    BACnet Address
NEXT                        17
EDIT                     0-127
```

BACnet device instance range: 0 – 4,194,302 (Default: 0057017). Press **EDIT**, then **MORE** to select digits. To continue, press **SAVE** and then **NEXT**.

```
EXIT    Instance Number
NEXT                   0057017
EDIT                 0-4194302
```

Baud rate for the BACnet communications. Options included: 9600, 19200, 38400, or 76800. (Default: 38400). Press **EDIT**, then **MORE** to select digits. To continue, press **SAVE** and then **NEXT**.

```
EXIT    Baud Rate
NEXT                     38400
EDIT
```

BACnet max master range: 17 – 127 (Default: 127). Press **EDIT**, then **MORE** to select digits. To continue, press **SAVE** and then **NEXT**.

```
EXIT    Max Master
NEXT                       127
EDIT                     17-127
```

4.2.1.2 Communication Settings – MODBUS

To select MODBUS, press **EDIT**, then **MORE**. To continue, press **SAVE** and then **NEXT**.

EXIT	Protocol	
NEXT		Modbus
EDIT		

MODBUS address range: 0 – 247 (Default: 017). Press **EDIT**, then **MORE** to select digits. To continue, press **SAVE** and then **NEXT**.

EXIT	Modbus Address	
NEXT		017
EDIT		0-247

Baud rate for the MODBUS communications. Options included: 9600, 19200, 38400 or 76800 or 115200. (Default: 9600). Press **EDIT**, then **MORE** to select digits. To continue, press **SAVE** and then **NEXT**.

EXIT	Baud Rate	
NEXT		9600
EDIT		

Error checking parity for the MODBUS communications. Options include: None, Odd, or Even (Default: None). Press **EDIT**, then **MORE** to select parity. To continue, press **SAVE** and then **NEXT**.

EXIT	Parity	
NEXT		None
EDIT		Odd Even None

Stop bits options include: 1 or 2 (Default: 1). Press **EDIT**, then **MORE** to select digit. To continue, press **SAVE** and then **NEXT**.

EXIT	Stop Bits	
NEXT		1
EDIT		1 2

4.2.1.3 Additional Displays

Additional displays can be configured after selecting the communication.

```
EXIT    Meter Location
NEXT                Supply
EDIT
```

Press **EDIT**, then **MORE** to select where the meter is located. Options include: Supply or Return. To continue, press **SAVE** and then **NEXT**.

```
EXIT    Set Time
NEXT                HH:MM:SS
EDIT
```

Setting the current time for the meter. Press **EDIT**, then **MORE** to set hour, minute, and second. To continue, press **SAVE** and then **NEXT**.

```
EXIT    Set Date
NEXT                YYYY/MM/DD
EDIT
```

Setting the current date for the meter. Press **EDIT**, then **MORE** to set year, month, and day. To continue, press **SAVE** and then **NEXT**.

```
BACK    Set Meter
        Press NEXT edit units
NEXT    of measure
        SAVE completes install
SAVE    with current settings
```

Use this menu option to continue commissioning or return to normal operation. Press **NEXT** to continue the meter set, or press **SAVE** to complete the installation.

CAUTION
Do NOT press SAVE of you wish to continue commissioning the meter. Otherwise, Commissioning Mode can be returned by holding the commissioning push button (terminal block SW6) until the commissioning display pages coming back. Refer to section 3.6 POWER AND SIGNAL WIRING CONNECTIONS for more details on the commissioning push button location.

4.2.2 Long Commissioning

```
BACK    Set Meter
        Press NEXT edit units
NEXT    of measure
        SAVE completes install
SAVE    with current settings
```

The Long Commissioning is an extension of the Short Commissioning. Long Commissioning helps to configure the meter, units of measurement, and the auxiliary inputs outputs, or an analog output.

From the Short Commissioning, press **NEXT** if you wish to access the remaining commissioning mode display pages.

4.2.2.1 Meter Configuration Settings

EXIT	Mode	
NEXT		Single
EDIT		Single or Dual

This display page determines the operating mode of the meter. Possible selections are **Single** (Energy calculated in either the heating or cooling mode), or **Dual** (Energy calculated in both the heating mode and the cooling mode). See section 4.3-USER SCREEN for more details on the available displays for single/ dual mode.

4.2.2.2 Units of Measure

EXIT	Medium	
NEXT		Water
EDIT		

Press **EDIT**, then **MORE** to select the medium type. Options include: Water, Propylene Glycol, Ethylene Glycol. To continue, press **SAVE** and then **NEXT**.

EXIT	Medium %	
NEXT		0
EDIT		0-50

Press **EDIT**, then **MORE** to select the medium percentage. This display only appears when Propylene Glycol or Ethylene Glycol selected above. The percentage range is from 0 – 50%. To continue, press **SAVE** and then **NEXT**.

EXIT	Flow	
NEXT		gpm
EDIT		Select Units

Press **EDIT**, then **MORE** to select metric or IP flow rate unit. To continue, press **SAVE** and then **NEXT**.

EXIT	Volume	
NEXT		gallons
EDIT		Select Units

Press **EDIT**, then **MORE** to select metric or IP volume unit. To continue, press **SAVE** and then **NEXT**.

EXIT	Energy	
NEXT		kBtu
EDIT		Select Units

Press **EDIT**, then **MORE** to select metric or IP energy unit. To continue, press **SAVE** and then **NEXT**.

EXIT	Energy Rate	
NEXT		kBtu/hr
EDIT		Select Units

Press **EDIT**, then **MORE** to select metric or IP energy rate unit. To continue, press **SAVE** and then **NEXT**.

EXIT	Temperature	
NEXT		Deg F
EDIT		Select Units

Press **EDIT**, then **MORE** to select the temperature unit. To continue, press **SAVE** and then **NEXT**.

4.2.2.3 Auxiliary Input/ Output Configuration Settings

Auxiliary pulsed I/O can be configured after selecting units. The meter can be programmed at two (2) aux pulsed inputs and one (1) aux pulsed output, OR one (1) aux pulsed input, one (1) aux pulsed output, and one (1) analog output. The number of I/O can also be changed through commissioning.

Below is the default setup displays for two (2) aux pulsed inputs and one (1) aux pulsed output.

One (1) aux pulsed input, one (1) aux pulsed output, and one (1) analog output set up displays are on the following page.

```
EXIT    Aux Config
NEXT                2 In 1 Out
EDIT
```

The default auxiliary configuration set as **2 IN 1 OUT**. This can be changed by select **EDIT**, and then **MORE**. To continue, press **SAVE**, and then **NEXT**.

```
EXIT    Num Aux Inputs
NEXT                        2
EDIT
```

Press **EDIT**, then **MORE** to select the number of aux input. To continue, press **SAVE** and then **NEXT**.

```
EXIT    Aux Input 1
NEXT                  Counts
EDIT
```

Press **EDIT**, then **MORE** to define aux input 1. To continue, press **SAVE** and then **NEXT**.

```
EXIT    Aux Input 2
NEXT                  Counts
EDIT
```

Press **EDIT**, then **MORE** to define aux input 2. To continue, press **SAVE** and then **NEXT**.

```
EXIT    Pulsed Output 3
NEXT
EDIT              Select Type
```

Press **EDIT**, then **MORE** to select type of pulse output 3. Options include: Energy Mode, Volume Mode, Alarm, and Modbus Coil. See 5.3 AUXILIARY OUTPUTS for more details. To continue, press **SAVE** and then **NEXT**.

```
BACK    Set Meter
        Press NEXT edit units
NEXT    of measure
        SAVE completes install
SAVE    with current settings
```

Use this menu option to save, exit commissioning and return to normal operation. Press **NEXT** to repeat the meter set, or press **SAVE** to complete the installation.

Important Note
Screen may vary based on settings.

4.2.2.3 Auxiliary Input/ Output (continued)
Default setup displays for one (1) aux pulsed input, one (1) aux pulsed output, and one (1) analog output.

EXIT	Aux Config
NEXT	1 In 1 Out 1 Analog
EDIT	

The default auxiliary configurations set as **1 IN, 1 OUT, and 1 ANALOG**. This can be changed by select **EDIT**. To continue, press **SAVE**, and then **NEXT**.

EXIT	Num Aux Inputs
NEXT	2
EDIT	

Press **EDIT**, then **MORE** to select number of aux input. To continue, press **SAVE** and then **NEXT**.

EXIT	Aux Input 1
NEXT	Counts
EDIT	

Press **EDIT**, then **MORE** to define aux input 1. To continue, press **SAVE** and then **NEXT**.

EXIT	Pulsed Output 2
NEXT	Off
SEL	Select Type

Press **EDIT**, then **MORE** to select type of pulse output 2. Options include: Energy Mode, Volume Mode, Alarm, and Modbus Coil. See 5.3 AUXILIARY OUTPUTS for more details. To continue, press **SAVE** and then **NEXT**.

EXIT	Analog Signal
NEXT	4-20 mA
SEL	Select Signal

Press **EDIT**, then **MORE** to select analog signal as 4-20 mA, 0-5 V or 0-10 V. Confirm if the jumper are switched into their position. Refer to section 5.5 JUMPER LOCATION and DETAIL for more details. To continue, press **SAVE**, and then **NEXT**.

EXIT	Analog Output
NEXT	Energy Rate
SEL	Select Type

Press **EDIT**, then **MORE** to select type of an analog output. Options include: Energy Rate, Volume Rate, Delta T, Supply Temperature, and Return Temperature. To continue, press **SAVE** and then **NEXT**.

BACK	Set Meter
NEXT	Press NEXT edit units of measure
SAVE	SAVE completes install with current settings

Use this menu option to save, exit commissioning and return to normal operation. Press **NEXT** to repeat the meter set, or press **SAVE** to complete the installation.

Important Note
Screen may vary based on settings.

4.3 USER SCREEN

```
        User Screens      !
        Commissioning
NEXT
SEL
```

Main Menu

User screens are read only display pages of the current information and settings in the meter. Changes to any of these pages can only be made during the commissioning process. (see section 4.2).

After the meter has been commissioned, verify that the meter is functional by stepping through the display pages and confirming the flow rate and temperature data is within expected norms.

Momentarily press **NEXT** or **BACK** to change the display pages, or **MENU** to get to the troubleshooting menu. See section 6.0 TROUBLESHOOTING for more details on the alarm messages and their solutions.

4.3.1 Single Mode

Single mode is the energy calculation in either the heating or cooling mode. It is chosen through commissioning the meter. See 4.2.2.1 METER CONFIGURATION SETTINGS for more details on how to select the mode status.

Below are the default setup screens for Single Mode. Energy Total, Volume Total, Energy Rate, and Volume Rate units are factory defaults.

```
BACK    Energy Total      !
NEXT                      0
MENU                  kBtu
```

Energy Total provides the total energy of the system tabulated by the meter.

```
BACK    Volume Total
NEXT                      0
MENU               gallons
```

Volume Total provides the flow volume total of the system tabulated by the meter.

```
BACK    Energy Rate
        4-20 ma = 0 to 300
NEXT                      0
MENU                kBtu/hr
```

Energy Rate provides a continuous display of the instantaneous energy rate of the system is tabulated by the meter. Scaling for the 4-20 mA, 0-5V or 0-10 V analog outputs will also be displayed.

```
BACK    Volume Rate
NEXT                      0
MENU                    gpm
```

Volume Rate provides a continuous display of the instantaneous flow rate of the system tabulated by the meter.

BACK	Supply Temp	
NEXT		0.0
MENU	Flow	Deg F

Supply Temp provides the instantaneous supply temperature of the system tabulated by the meter.

BACK	Return Temp	
NEXT		0.0
MENU		Deg F

Return Temp provides the instantaneous return temperature of the system tabulated by the meter.

Important Note
When reviewing the Supply and Return temperature display pages, note which one has the word "FLOW" in the lower left corner of the page. This is an indication of the flow sensor location in the piping system. Verify the actual location of the flow sensor in the piping system. It is critical that the correct location (supply or return) be programmed into the meter. Failure to do so will result in significant error in both the flow and energy measurements.

BACK	Delta Temp	
NEXT		0.00
MENU		Deg F

Delta Temp provides the instantaneous difference between the supply and return temperature of the system is tabulated by the meter.

BACK	Aux Input 1	
NEXT		0
MENU		Counts

*

The default description and communication via each auxiliary input is "Counts." Each pulse is a count of an accumulated value from the remote device.

BACK	Aux Input 2	
NEXT		0
MENU		Counts

*

The System-40 allows the user to change this description through the commissioning process. See section 4.2.2.3 AUXILIARY INPUT/ OUTPUT CONFIGURATION SETTINGS for more details on changing the aux description.

BACK	Aux Input 3	
NEXT		0
MENU		Counts

*

**** These screens will only appear if Aux I/O was configured at factory for Pulse Input. See section 5.0 AUXILIARY INPUTS and OUTPUTS for more information.***

BACK	Run Hours	
NEXT		0
MENU		hours

Run Hours provides the instantaneous total hours the meter has run.

4.3.2 Dual Mode

Dual mode is the energy calculations in the heating mode and the cooling mode. It is chosen through commissioning the meter. See 4.2.2.1 METER CONFIGURATION SETTINGS for more details on how to select the mode status.

Similar to the Single Mode, when Dual Mode selected, **Energy Total** and **Volume Total** will be displayed for M1 and M2 (cooling and heating mode). An extra **Mode Status** screen will be displayed for the mode indication.

4.4 SEALING THE METER

Once commissioning is complete, install the two security seals provided with the meter.

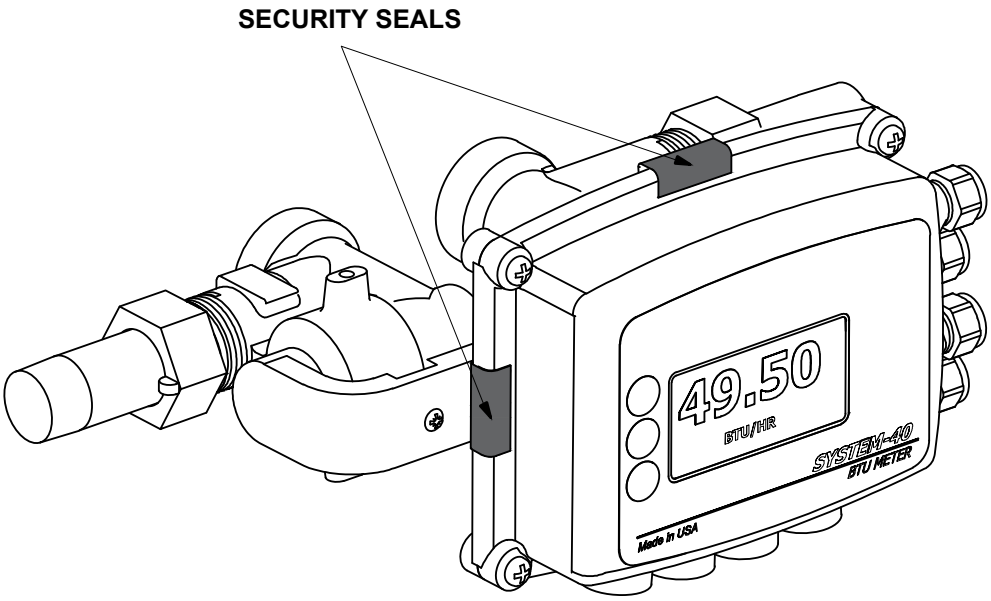

SECTION 5.0 AUXILIARY INPUTS AND OUTPUTS

5.1 DETERMINING AUXILIARY INPUTS AND OUTPUTS CONFIGURATIONS

The ONICON System-40 can be configured to provide a variety of auxiliary input and output combinations. The factory aux pulse input and output configuration can be changed in the field by changing the jumper positions for jumpers J1 – J3.

If the meter has been ordered with the analog output option, Jumper JP1 can be used to configure the analog output as 4-20 mA or as a voltage output (0-10 V or 0-5 V). Refer to the wiring detail on page 32 for jumper locations.

5.2 AUXILIARY INPUTS

When configured for auxiliary pulse inputs, the System-40 will have the ability to bring in local dry contact and open collector pulses which can be displayed by the RS485 output.

The default description and communication via each auxiliary input is "Counts." Each pulse is a count of an accumulated value from the remote device. The System-40 allows the user to change this description through the commissioning process. See 4.2.2.3 AUXILIARY INPUT/ OUTPUT CONFIGURATION SETTINGS for more information.

The local aux input description of the System-40 only appears on the LCD display. The value transmitted over the RS485 network will be a unitless count, regardless of the description programmed into the System-40. To reset the auxiliary pulse input counts, please refer to the registers in the MODBUS memory maps, located in section 8.0 MODBUS.

5.3 AUXILIARY OUTPUTS

When configured for auxiliary pulse outputs, the System-40 will have the ability to provide contact closure pulses for use with a remote totalizer or building automation system. The System-40 allows the user to change this description through the commissioning process. See 4.2.2.3 AUXILIARY INPUT/ OUTPUT CONFIGURATION SETTINGS for more information.

5.3.1 Single Mode Operation Pulse Outputs

The following pulse outputs are available from the System-40 when configured for single mode operation in commissioning. Refer to 4.3.1 SINGLE MODE for more information.

Total Volume - Units match LCD totalizer. Output can be scaled for 1, 10, or 100.

Example: If configured for 10, the meter will require 10 LCD display accumulations before a pulse output is provided.

Total Energy - Units match LCD totalizer. Output can be scaled for 1, 10, or 100.

Example: If configured for 10, the meter will require 10 LCD display accumulations before a pulse output is provided.

Mode Indication - Latching output. The output will remain open when the meter is in heating mode (supply temp. > return temp.) and will latch closed when the meter is in cooling mode.

Alarm - Latching output. The output will remain open when the meter is not in alarm and will latch closed when the meter is in alarm. A list of alarms can be found in Section 6.1 ALARM.

MODBUS Coil (Discrete Output) - Controls a latching output. The output will remain open when the MODBUS coil associated with the auxiliary terminal is inactive, and the output will latch closed when the coil is activated. The MODBUS memory map, which describes the registers associated with the coils and how to use them, is described in Section 8.1 MODBUS MEMORY MAP.

5.3 AUXILIARY OUTPUTS (CONTINUED)

5.3.2 Dual Mode Operation Pulse Outputs

The following pulse outputs are available from the System-40 when configured for dual mode operation in commissioning. Refer to 4.3.2 DUAL MODE for more information.

Mode 1 Total Volume – Units match LCD totalizer. Output can be scaled for 1, 10, or 100.

Example: If configured for 10, the meter will require 10 LCD display accumulations before a pulse output is provided. A pulse will occur when the Mode 1 volume is incremented. Mode 1 is heating mode (supply temp > return temp).

Mode 2 Total Volume – Units match LCD totalizer. Output can be scaled for 1, 10, or 100.

Example: If configured for 10, the meter will require 10 LCD display accumulations before a pulse output is provided. A pulse will occur when the Mode 2 volume is incremented. Mode 2 is cooling mode (supply temp < return temp).

Mode 1 Total Energy - Units match LCD totalizer. Output can be scaled for 1, 10, or 100.

Example: If configured for 10, the meter will require 10 LCD display accumulations before a pulse output is provided. A pulse will occur when the Mode 1 energy is incremented. Mode 1 is heating mode (supply temp > return temp).

Mode 2 Total Energy - Units match LCD totalizer. Output can be scaled for 1, 10, or 100.

Example: If configured for 10, the meter will require 10 LCD display accumulations before a pulse output is provided. A pulse will occur when the Mode 2 energy is incremented. Mode 2 is heating mode (supply temp < return temp).

Mode Indication – Latching output. The output will remain open when the meter is in heating mode (supply temp > return temp) and will latch closed when the meter is in cooling mode.

Alarm - Latching output. The output will remain open when the meter is not in alarm and will latch closed when the meter is in alarm. A list of alarms can be found in Section 6.1 ALARM.

MODBUS Coil (Discrete Output) - Controls a latching output. The output will remain open when the MODBUS coil associated with the auxiliary terminal is inactive, and the output will latch closed when the coil is activated. The MODBUS memory map, which describes the registers associated with the coils and how to use them, is described in Section 8.1 MODBUS MEMORY MAP.

5.4 ANALOG OUTPUT

When configured with an auxiliary analog output, the System-40 will have the ability to send a single analog signal to a remote device or building automation system. The analog output can be programmed in the commissioning menu for 4-20 mA, 0-5 V, or 0-10 V output types. The factory default is 4-20 mA.

Energy Rate, Volume Rate, Delta Temperature, Supply Temperature and Return Temperature are available to be mapped to the analog output.

The analog output is configured in the commissioning menu. See 4.2.2.3 AUXILIARY INPUT/ OUTPUT CONFIGURATION SETTINGS for more information.

The minimum value set in programming will be what 4 mA or 0 V is equivalent to. The maximum value set in programming will be what 20 mA / 5 V / 10 V is equivalent to.

Example: A 4-20 mA analog output configured as supply temperature with a minimum of 30 and maximum of 80 will have an output signal of 4-20 mA = 30°F-80°F.

The units of measurement for the analog output will match the LCD description on the System-40. If the System-40 is equipped with an analog output, the page which corresponds to the analog output will show the output signal type and scaling programmed.

5.5 JUMPER LOCATIONS AND DETAILS

The ONICON System-40 can be ordered pre-configured with the required auxiliary inputs, outputs or an analog output already selected. The meter has several options that can be selected by installing or removing jumpers. If the outputs need to be changed, move the jumpers into positions shown in diagram below.

Channel 1 and 2 - Auxiliary Pulse Inputs and Outputs

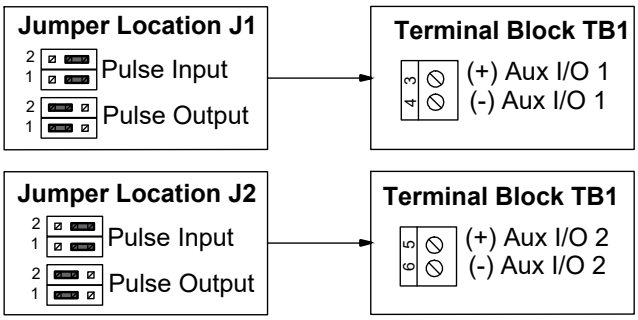

Channel 3 - Auxiliary Pulse Inputs, Outputs or Analog Output

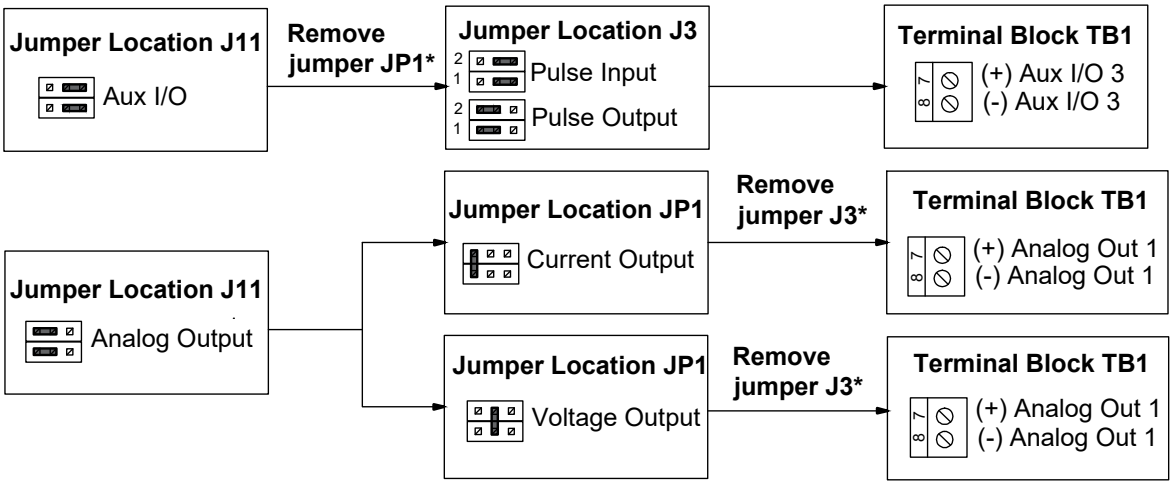

To reposition the jumpers, follow the procedure described below:

- Remove the power. DO NOT remove the enclosure when the transmitter is live.
- Reposition the jumpers as described.
- J1-J3 sets Aux I/O 1 - Aux I/O 3 as inputs or outputs
- JP1 configures Aux I/O 3 analog output as either a 4-20 mA or a voltage (0-10V or 0-5V) output

* Please refer to System-40 wiring diagram located on page 18 for more details on the jumper locations.

SECTION 6.0 TROUBLESHOOTING & OTHER INFORMATION

```
BACK    Energy Total      !

NEXT                      0

MENU                   kBtu
```

To access to the troubleshooting display page, momentarily press **MENU** located on the lower left corner of the display in the user screens menu.

```
EXIT    More Totals       !
        !Alarm
NEXT    Diagnostic
        Meter Data
SEL
```

The following page will appear. Press **NEXT** to navigate these selections, then **SEL** (select) or press **EXIT** to return to the user screen display pages.

6.1 ALARM

```
EXIT    Alarm             !

MORE    Signal Fault
        Empty Pipe
MENU
```

Alarms provide the user with real time operating information. Alarm messages alert the user to potential problems.

Alarms are indicated by an exclamation point (**!**) in the upper right-hand corner of the display. A flashing occurs when the meter is operating outside of normal operating conditions. Below are the alarm messages and their recommendations:

Message	Description	Solution
System Fault	This message indicates a hardware malfunction. At this point, meter will not calculate the energy.	Contact ONICON technical support for further assistance.
Reverse Flow	This message occurs when meter detects reverse water flow. At this point, meter will not calculate the energy.	Verify the flow direction. The flow direction should follow the arrow indicator in the meter body. Otherwise, contact ONICON technical support for further assistance.
Signal Fault	This message occurs when the flow signal is weak. It may indicate entrained air in the flow stream.	Verify if the pipes are free of dirt and debris. Verify if air is trapped in the piping system. Otherwise, contact ONICON technical support for further assistance.
Dt< Minimum	This message occurs when the delta temperature is low.	Verify if the proper amount of water is being delivered to the load. Otherwise, contact ONICON technical support for further assistance.
Empty Pipe	This message occurs when the pipe is empty, or it may indicate entrained air in the flow stream.	Verify if air is trapped in the piping system. Otherwise, contact ONICON technical support for further assistance.

6.1 ALARM (CONTINUED)

Message	Description	Solution
Flow RTD Open	This message occurs when the temperature sensor in the flow body is reading open. The meter will not calculate energy in this state.	Verify if both the temperature sensor cables are properly connected. Otherwise, contact ONICON technical support for further assistance.
Flow RTD Short	This message occurs when the temperature sensor in the flow body is reading as a short circuit. The meter will not calculate energy in this state.	Verify if the temperature sensor cables do not contact each other. Otherwise, contact ONICON technical support for further assistance.
Remote RTD Open	This message occurs when the remote temperature sensor is reading open. The meter will not calculate energy in this state.	Verify if both the temperature sensor cables are properly connected. Otherwise, contact ONICON technical support for further assistance.
Remote RTD Short	This message occurs when the remote temperature sensor is reading as a short circuit. The meter will not calculate energy in this state.	Verify if the temperature sensor cables do not contact each other. Otherwise, contact ONICON technical support for further assistance.
Low Flow	This message occurs when the flow reading is below the minimum flow threshold of the meter (e.g. 0.03 gpm for ½" meter). The meter will not calculate energy in this state.	Contact ONICON technical support for further assistance.
High Flow	This message occurs when the flow reading is above the maximum flow rate of the meter (e.g. 15 gpm for ½" meter). The meter will not calculate energy in this state.	Contact ONICON technical support for further assistance.
Down Transducer Range	This message occurs when the downstream transit time being passed through the transducers is either too low or too high.	Verify if air is trapped in the piping system. Otherwise, contact ONICON technical support for further assistance.
Up Transducer Range	This message occurs when the upstream transit time being passed through the transducers is either too low or too high.	Verify if air is trapped in the piping system. Otherwise, contact ONICON technical support for further assistance.
Low Signal Quality	This message occurs when the transducers signal is low.	Verify if air is trapped in the piping system. Otherwise, contact ONICON technical support for further assistance.

Important Note
Refer to 4.2 COMMISSIONING for more information.

6.2 DIAGNOSTICS

```
EXIT    More Totals      !
        !Alarm
NEXT    Diagnostic
        Meter Data
SEL
```

Diagnostic provides the user with general operating information. From the troubleshooting display, press **NEXT** and **SEL** (select) **Diagnostic**.

```
EXIT    Signal Strength
NEXT                  0
MENU     0 = Empty Pipe
```

Signal Strength provides the percentage of the flow transducer signal amplifier's automatic gain control operating level. Variable scaled from 0-90%.

65% - 90% : Good transducer signal
Reading < 65% : Poor tranducer signal. At this point, Signal Quality needs to be verified.

```
EXIT    Signal Quality
NEXT    Gain R1=31 R2=30
MENU        Factor 0.0%
```

Signal Quality provides the percentage between R1 (Automatic Gain Control) and R2 (Factory Set-up Control). Factor % recommendation:

50% - 75% : Good transducer signal
10% - 49% : Poor transducer signal
Reading < 10%: Transducer signal is not functioning

```
EXIT    Speed of Sound
NEXT          0000.000
MENU               ft/s
```

Speed of Sound is desirable to record the initial value at a defined temperature during commissioning.

```
EXIT    Transit Time
NEXT          000.000Up
              000.000Dn
MENU
```

Transit Time measure the difference in time from when a signal is transmitted from one transducer until it crosses the pipe and is received by the other transducer. The greater the difference, the faster the liquid is flowing.

Up = Against the flow
Down = With the flow

```
EXIT    Highest Temp Display
NEXT          000.000
MENU            Deg F
```

Highest Temp Display reports highest temperature experienced by flow meter.

6.3 MORE TOTALS

EXIT	YTD Energy	
NEXT		0
MENU		kBtu

YTD Energy provides the meter commissioning total energy measured by the meter. This total will become the previous year total and reset to zero at 12:01 AM on January 1st of each year.

EXIT	YTD Volume	
NEXT		0
MENU		gallons

YTD Volume provides the meter commissioning total flow of the medium (water/ propylene glycol/ ethylene glycol) measured by the meter. This total will become the previous year total and reset to zero at 12:01 AM on January 1st of each year.

EXIT	Prev. Yr Energy	
NEXT		0
MENU		kBtu

Prev.Yr Energy provides the energy total measured from the previous year. This total will be replaced by the YTD Energy total at 12:01 AM on January 1st of each year.

EXIT	Prev. Yr Volume	
NEXT		0
MENU		gallons

Prev.Yr Volume provides the flow total measure from the previous year. This total will be replaced by the YTD Volume total at 12:01 AM on January 1st of each year.

EXIT	User Energy Total	
NEXT		0
MENU		kBtu

User Energy Total is a totalizer that can be set by the user for the total value in Metric or IP unit. It can also be reset to 0.

6.4 METER DATA

```
EXIT    Serial Number
NEXT                 000000
MENU
```

Serial Number provides a read-only record of the electronics serial number.

```
EXIT    Manufacture Date
NEXT              0000/00/00
MENU         Year/Month/Day
```

Manufacture Date provides a read-only date of manufacture for the meter.

```
EXIT    Calibration Date
NEXT              0000/00/00
MENU         Year/Month/Day
```

Calibration Date provides a read-only date of calibration for the meter.

```
EXIT    Versions
NEXT    App:0.0.0
        Boot:0.0.0
        DA:0.0.0
        DB:0.0.0
        Pre:0.0.0
MENU
```

Versions provides a read-only current versions of the meter.

```
EXIT    Config Number
NEXT                 0000
MENU
```

Config Number provides a read-only number gives the complete the configuration values of the meter.

SECTION 7.0 BACNET MS/TP

BACnet MS/TP, serial interface connections are connected at terminal block TB4.

Transceiver: 2-wire, half-duplex (1/4 unit load)

BACnet address (MAC address) range: 1 - 127 (Default: 017)

Device Instance: 0 - 4,194,302 (Default: 57017)

Baud rate: 9600, 19200, 38400 or 76800 (Default: 38400)

Termination: 120 ohms or none (Default: none)

Biasing: None

Flow control: None

7.1 BACNET OBJECT TYPES

BACnet Object Type and Number of Objects Implemented Device - 1

Analog Input - 10

Analog Value - 24

Binary Value- 10

Multistate Object - 1

Trend Log Multiple - 1

7.2 PROTOCOL IMPLEMENTATION STATEMENT

BACnet Protocol Revision: 10

Device Profile (Annex L): BACnet Application Specific Controller (B-ASC) MS/TP master (Clause 9), baud rate(s): 9600, 19200, 38400 & 76800

Device Address Binding: No

BBMD support registration by Foreign Devices: No

Character Set Supported: ANSI X3.4

BACnet Interoperability Building Blocks Supported (Annex K):

Data Sharing-ReadProperty-B (DS-RP-B)

Data Sharing - ReadProperty Multiple - B (DS-RPM-B)

Data Sharing-WriteProperty-B (DS-WP-B)

Data Sharing - WriteProperty Multiple - B (DS-WPM-B)

Device Management-Dynamic Device Binding - B (DM-DDB-B)

Device Management-Dynamic Object Binding - B (DM-DOB-B)

Device Management-DeviceCommunicationControl-B (DM-DCC-B)

Device Management-Time Synchronization - B (DM-TS-B)

Device Management - UTC Time Synchronization – B (DM-UTC-B)

Trending - View and Modify Multiple Values - I – B (T-VMMV-I-B)

Standard Object Types Supported:

Device Object	Binary Value Object
Analog Input Object	Multi-State Value
Analog Value Object	Trend Log Multiple

7.3 DEVICE OBJECT

Property	Default Value	Read-only or Writable	Comment
Object Identifier	57017	Writable	0-4,194,303
Object Name	System-40-XXXXXX	Read-only	
Object Type	Device	Read-only	
System Status	Operational	Read-only	
Vendor Name	ONICON Inc.	Read-only	
Model Name	System-40-BAC	Read-only	
Firmware Rev.	000.000.000	Read-only	
Location	Customer Location	Writable	32 char. Max
Description	Customer Description	Writable	32 char. Max
Protocol Version	1	Read-only	
Protocol Revision	10	Read-only	
Services Supported	Read property, Read property multiple, Write property, Write property multiple, Read range, Who-has, I have, Who-is, I-am, Device communications control, Time synchronization, UTC time synchronization	Read-only	
Object Types Supported	Analog input, Analog value, Binary input, Device, Multi-state value, Trend log multiple	Read-only	
Object List	(Device, 57017), (analog input, 1 – 10), (analog value, 1 – 24), (binary value, 1 – 10), (trend log multiple, 1), (multi state value, 1)	Read-only	
Max ADPU Length	480	Read-only	
Local Time	Device current time	Read-only	
Local Date	Device current date	Read-only	
UTC Offset	-300	Writable	
Daylight Savings Status	False	Writable	
APDU Time-out	6000	Read-only	
# of APDU Retries	3	Writable	
Max Master	127	Read-only	
Device Address Binding		Read-only	Active
Database Revision	1	Read-only	

7.4 ANALOG INPUT(S)

Property	Default Value	Read-only or Writable
Object Identifier	Analog input 1 to 10	Read-only
Object Name	Various	Read-only
Object Type	Analog-input	Read-only
Present Value	REAL	Writable
Description	Analog-input,# Name	Read-only
Status Flags	(F,F,F,F)	Read-only
Event State	Normal	Read-only
Reliability	No-fault-detected	Read-only
Out-of-Service	FALSE	Writable
Update interval	100	Read-only
Units	Various	Read-only
Min-Present-Value	-1000000000	Read-only
Max-Present-Value	1000000000	Read-only
Resolution	0.000001	Read-only

Object Identifier	Function
Analog input 1	Energy rate
Analog input 2	Volume rate
Analog input 3	Supply temperature
Analog input 4	Return temperature
Analog input 5	Delta temperature
Analog input 6	Signal strength
Analog input 7	Signal quality
Analog input 8	Speed of sound
Analog input 9*	Peak energy rate
Analog input 10*	Average delta temp

*Time interval set by Trend Log Object

BACnet Engineering Units for Analog Inputs (**Defaults**)

Energy rate: **kBtu/h**, tons, kW or MW

Volume rate: **gpm**, l/s, ft3/m or m3/h

Temperature: **°F** or °C

Signal strength: No units (0 – 100 counts)

Signal quality: No units (3 – 31 counts, 3 = best)

Speed of sound: **ft/s** or m/s

7.5 ANALOG VALUES

Property	Default Value	Read-only or Writable
Object Identifier	Analog value 1 to 24	Read-only
Object Name	Various	Read-only
Object Type	Analog-value	Read-only
Present Value	REAL	Writable
Description	Analog-value,# Name	Read-only
Status Flags	(F,F,F,F)	Read-only
Event State	Normal	Read-only
Reliability	No-fault-detected	Read-only
Out-of-Service	FALSE	Writable
Units	Various	Read-only
Priority Array	{NULL, NULL, NULL, NULL, NULL, NULL, NULL, NULL, NULL, NULL, NULL, NULL, NULL, NULL, NULL, NULL}	Read-only
Relinquish Default	0	Read-only

Analog Value Objects		
Object Identifier	**Single Mode Function**	**Dual Mode Function**
Analog value 1	Energy total	Mode 1 energy total
Analog value 2	Energy total	Mode 2 energy total
Analog value 3	Y-T-D energy total	Y-T-D mode 1 energy total
Analog value 4	Y-T-D energy total	Y-T-D mode 2 energy total
Analog value 5	Previous year energy total	Previous Year mode 1 energy total
Analog value 6	Previous year energy total	Previous Year mode 2 energy total
Analog value 7	User defined energy total	User mode 1 energy total
Analog value 8	User defined energy total	User mode 2 energy total
Analog value 9	Volume total	Mode 1 volume total
Analog value 10	Volume total	Mode 2 volume total
Analog value 11	Y-T-D volume total	Y-T-D mode 1 volume total
Analog value 12	Y-T-D volume total	Y-T-D mode 2 volume total
Analog value 13	User defined volume total	User mode 1 volume total
Analog value 14	User defined volume total	User mode 2 volume total
Analog value 15	Aux pulse input 1 total	Aux pulse input 1 total
Analog value 16	Aux pulse input 2 total	Aux pulse input 2 total
Analog value 17	Aux pulse input 3 total	Aux pulse input 3 total
Analog value 18	Run hours	Run hours
Analog value 19*	Incremental energy total	Incremental energy total mode 1
Analog value 20*	Incremental energy total	Incremental energy total mode 2
Analog value 21*	Incremental volume total	Incremental volume total mode 1
Analog value 22*	Incremental volume total	Incremental volume total mode 2
Analog value 23	Previous year volume total	Previous Year mode 1 volume total
Analog value 24	Previous year volume total	Previous Year mode 2 volume total

*Time interval set by Trend Log Object

7.5 ANALOG VALUES (CONTINUED)

BACnet Engineering Units for Analog Values (Defaults)

Energy: **kBtu**, MBtu, ton-hours, kJ, MJ, kWh or MWh

Volume: **gallons**, liters, ft3 or m3

Auxiliary pulse inputs: No units (counts)

Run hours: Hours

7.6 BINARY VALUE(S)

Property	Default Value	Read-only or Writable
Object Identifier	Binary value 1 to binary value 10	Read-only
Object Name	Various	Read-only
Object Type	Binary-value	Read-only
Present Value	0	Writable
Description	Binary-value,# Name	Read-only
Status Flags	(F,F,F,F)	Read-only
Event State	Normal	Read-only
Reliability	No-fault-detected	Read-only
Out-of-Service	FALSE	Writable
Elapsed Active Time	Various	Read-only
Priority Array	(NULL, NULL, NULL, NULL, NULL, NULL, NULL, NULL, NULL, NULL, NULL, NULL, NULL, NULL, NULL, NULL)	Read-only
Relinquish Default	0	Read-only

Binary Value Objects		
Object Identifier	**Description**	**Notes**
Binary value 1	Mode indication	0 = mode 1, 1 = mode 2
Binary value 2	Location	0 = supply, 1 = return
Binary value 3	User defined energy total reset, Mode 1	1 = reset total
Binary value 4	User defined energy total reset, Mode 2	1 = reset total
Binary value 5	User defined volume total reset, Mode 1	1 = reset total
Binary value 6	User defined volume total reset, Mode 2	1 = reset total
Binary value 7	Aux input 1 total reset	1 = reset total
Binary value 8	Aux input 2 total reset	1 = reset total
Binary value 9	Aux input 3 total reset	1 = reset total
Binary value 10	Flow direction	1 = reverse flow

7.7 MULTI-STATE VALUE

Property	Default Value	Read-only or Writable
Object Identifier	Multi state value 1	Read-only
Object Name	Meter Status	Read-only
Object Type	Multi-state-value	Read-only
Present Value	1	Writable
Description	Multi-state-value,# Name	Read-only
Status Flags	(F,F,F,F)	Read-only
Event State	Normal	Read-only
Reliability	No-fault-detected	Read-only
Out-of-Service	FALSE	Writable
Number of States	11	Read-only
State Text	Normal, Low Supply Temperature, High Supply Temperature, Low Return Temperature, Delta T< Minimum, High Energy Rate, Low Signal Quality, Comm Error, Low Supply Voltage, System Fault	Read-only
Relinquish Default	0	Read-only

Multi-state Object		
Object Identifier	**Description**	**Notes**
Multi-state value 1	Reports the operating status of the meter	Numeric values indicate meter status.
	1 = Normal	
	2 = Low Supply Temperature	
	3 = High Supply Temperature	
	4 = Low Return Temperature	
	5 = High Return Temperature	
	6 = Delta T < Minimum	
	7 = High Energy Rate	
	8 = Low Signal Quality	
	9 = Comm error	
	10 = Low Supply Voltage	
	11= System Fault	

7.8 TREND LOG MULTIPLE

Property	Default Value	Read-only or Writable
Object Identifier	Trend log multiple 1	Read-only
Object Name	Log Data	Read-only
Object Type	Trend-log-multiple	Read-only
Description	Trend-log-multiple,# Name	Read-only
Status Flags	(F,F,F,F)	Read-only
Event State	Normal	Read-only
Reliability	No-fault-detected	Read-only
Enable	TRUE	Writable
Log Device Property		Read-only
Logging Type	POLLED	Read-only
Log Interval	90000	Writable
Stop When Full	FALSE	Read-only
Buffer Size	480	Read-only
Log Buffer		Read-only
Record Count	0	Writable
Total Record Count	0	Read-only

Trend log Multiple Object		
Object Identifier	**Description**	**Notes**
Trendlog Multiple 1	Logs the following BACnet objects: Peak energy rate Average delta temp Incremental energy total mode 1 Incremental energy total mode 2 Incremental volume total mode 1 Incremental volume total mode 2 Meter status (multi-state object)	The log buffer holds 120 records and then rolls over with the first in as first out. The logging interval can be set from 30 seconds to 1 hour via BACnet. The default interval is 15 minutes.

SECTION 8.0 MODBUS

MODBUS, serial interface connections are connected at terminal block TB4. Transceiver: 2-wire, half-duplex (1/4 unit load)
MODBUS address range: 1 - 247 (Default: 017)
Data format: 8 bit
Stop Bits: 1
Parity: None (Default), Odd, or Even
Byte Order: ABCD
Baud rate: 4800, 9600, 19200, 38400, 57600, 76800 or 115200 (Default: 9600)
Termination: Jumper selectable 120 Ω resistor
Biasing: None

Engineering Units	Abbreviation	Engineering Units	Abbreviation
Energy Rate		**Energy Total**	
Btu per hour x 1,000	kBtu/hr	Btu x 1,000	kBtu
Tons	Tons	Btu x 1,000,000	MBtu
Watts x 1,000	kW	Ton-hour	TonHr
Watts x 1,000 x 1,000,000	MW	Joules x 1,000,000	MJ
Volume Rate (Flow)		Watt-hours x 1,000	kWHr
Gallons per minute	GPM	**Volume Total**	
Liters per second	L/s	Gallons	Gal
Cubic feet per minute	ft^3/min	Liters	Liters
Cubic meters per hour	m^3/hr	Cubic Feet	ft^3
Temperature		Cubic Meters	m^3
Degrees Fahrenheit	ºF		
Degrees Celsius	ºC		
Velocity (Flow velocity, Fluid speed of sound)			
Feet per second	ft/s		
Meters per second	m/s		

Function Codes Supported
01 - Read Coil(s)
02 - Read Discreet Input(s)
03 - Read Holding Register(s)
04 - Read Input Register(s)
05 - Write Single Coil
06 - Write Single Register
08 - Diagnostic
15 - Write Multiple Coils
16 - Write Multiple Registers
17 - Report Slave ID

8.1 MODBUS MEMORY MAP

Register Address	Description	Register Type	Data Range	Over Range	Read/Write	Comments
1	Reset User Defined Energy Total - Single Mode	Coil	NA	NA	Read/Write	Turn coil ON (1) to reset total on System-40. Turn coil to OFF (0)once reset is complete.
2	Reset User Defined Energy Total - Mode 1	Coil	NA	NA	Read/Write	Turn coil ON (1) to reset total on System-40. Turn coil to OFF (0)once reset is complete.
3	Reset User Defined Energy Total - Mode 2	Coil	NA	NA	Read/Write	Turn coil ON (1) to reset total on System-40. Turn coil to OFF (0)once reset is complete.
4	Reset User Defined Volume Total - Single Mode	Coil	NA	NA	Read/Write	Turn coil ON (1) to reset total on System-40. Turn coil to OFF (0)once reset is complete.
5	Reset User Defined Volume Total - Mode 1	Coil	NA	NA	Read/Write	Turn coil ON (1) to reset total on System-40. Turn coil to OFF (0)once reset is complete.
6	Reset User Defined Volume Total - Mode 2	Coil	NA	NA	Read/Write	Turn coil ON (1) to reset total on System-40. Turn coil to OFF (0)once reset is complete.
7	Reset Aux Input Total - Input 1	Coil	NA	NA	Read/Write	Turn coil ON (1) to reset total on System-40. Turn coil to OFF (0)once reset is complete.
8	Reset Aux Input Total - Input 2	Coil	NA	NA	Read/Write	Turn coil ON (1) to reset total on System-40. Turn coil to OFF (0)once reset is complete.
9	Reset Aux Input Total - Input 3	Coil	NA	NA	Read/Write	Turn coil ON (1) to reset total on System-40. Turn coil to OFF (0)once reset is complete.
10	Reset Aux Input Total - All Inputs	Coil	NA	NA	Read/Write	Turn coil ON (1) to reset total on System-40. Turn coil to OFF (0)once reset is complete.
11	Aux Output 1	Coil	NA	NA	Read/Write	Turn coil ON (1) to latch Aux I/O # 1 closed. Turn coil to OFF (0) to latch I/O # 1 open. Aux I/O # 1 must have been configured as an output at the factory, and programmed for "MODBUS Coil" in the commissioning menu.
12	Aux Output 2	Coil	NA	NA	Read/Write	Turn coil ON (1) to latch Aux I/O # 2 closed. Turn coil to OFF (0) to latch I/O # 2 open. Aux I/O # 2 must have been configured as an output at the factory, and programmed for "MODBUS Coil" in the commissioning menu.
13	Aux Output 3	Coil	NA	NA	Read/Write	Turn coil ON (1) to latch Aux I/O # 3 closed. Turn coil to OFF (0) to latch I/O # 3 open. Aux I/O # 3 must have been configured as an output at the factory, and programmed for "MODBUS Coil" in the commissioning menu.

Register Address	**Description**	**Register Type**	**Data Range**	**Over Range**	**Read/ Write**	**Comments**
10001	Mode Indication	Discreet Input	1-2	NA	Read Only	1- Indicates Heating Mode; 2- Indicates Cooling Mode
10002	Location	Discreet Input	1-2	NA	Read Only	1- Indicates heating mode; 2- Indicates cooling mode
10003	Mode Single Dual	Discreet Input	1-2	NA	Read Only	1- Indicates meter configured as single mode; 2- indicates meter configures as dual mode
Register Address	**Description**	**Register Type**	**Register Type**			**Comments**
30001	Energy Rate - kBtu/hr	Input Register	Floating Point Register (1 of 2)			
30002	Energy Rate - kBtu/hr	Input Register	Floating Point Register (2 of 2)			
30003	Energy Rate - Tons	Input Register	Floating Point Register (1 of 2)			
30004	Energy Rate - Tons	Input Register	Floating Point Register (2 of 2)			
30005	Energy Rate - kW	Input Register	Floating Point Register (1 of 2)			
30006	Energy Rate - kW	Input Register	Floating Point Register (2 of 2)			
30007	Energy Rate - MW	Input Register	Floating Point Register (1 of 2)			
30008	Energy Rate - MW	Input Register	Floating Point Register (2 of 2)			

8.1 MODBUS MEMORY MAP (CONTINUED)

30009	Volume Rate - GPM	Input Register	Floating Point Register (1 of 2)	
30010	Volume Rate - GPM	Input Register	Floating Point Register (2 of 2)	
30011	Volume Rate - L/s	Input Register	Floating Point Register (1 of 2)	
30012	Volume Rate - L/s	Input Register	Floating Point Register (2 of 2)	
30013	Volume Rate - ft3/min	Input Register	Floating Point Register (1 of 2)	
30014	Volume Rate - ft3/min	Input Register	Floating Point Register (2 of 2)	
30015	Volume Rate - m3/hr	Input Register	Floating Point Register (1 of 2)	
30016	Volume Rate - m3/hr	Input Register	Floating Point Register (2 of 2)	
30017	Flow Temperature - °F	Input Register	Floating Point Register (1 of 2)	Temperature measured by RTD in flow meter location
30018	Flow Temperature - °F	Input Register	Floating Point Register (2 of 2)	Temperature measured by RTD in flow meter location
30019	Flow Temperature - °C	Input Register	Floating Point Register (1 of 2)	Temperature measured by RTD in flow meter location
30020	Flow Temperature - °C	Input Register	Floating Point Register (2 of 2)	Temperature measured by RTD in flow meter location
30021	Remote Temperature - °F	Input Register	Floating Point Register (1 of 2)	Temperature measured by remote RTD
30022	Remote Temperature - °F	Input Register	Floating Point Register (2 of 2)	Temperature measured by remote RTD
30023	Remote Temperature - °C	Input Register	Floating Point Register (1 of 2)	Temperature measured by remote RTD
30024	Remote Temperature - °C	Input Register	Floating Point Register (2 of 2)	Temperature measured by remote RTD
30025	Delta Temperature - °F	Input Register	Floating Point Register (1 of 2)	
30026	Delta Temperature - °F	Input Register	Floating Point Register (2 of 2)	
30027	Delta Temperature - °C	Input Register	Floating Point Register (1 of 2)	
30028	Delta Temperature - °C	Input Register	Floating Point Register (2 of 2)	
30029	Signal Strength (No Units)	Input Register	Floating Point Register (1 of 2)	Range = 1-31; 1 is highest signal strength; 31 is lowest signal strength
30030	Signal Strength (No Units)	Input Register	Floating Point Register (2 of 2)	Range = 1-31; 1 is highest signal strength; 31 is lowest signal strength
30031	Signal Quality (No Units)	Input Register	Floating Point Register (1 of 2)	
30032	Signal Quality (No Units)	Input Register	Floating Point Register (2 of 2)	
30033	Speed Of Sound - ft/sec	Input Register	Floating Point Register (1 of 2)	Measured speed of sound of the fluid in the pipe
30034	Speed Of Sound - ft/sec	Input Register	Floating Point Register (2 of 2)	Measured speed of sound of the fluid in the pipe
30035	Speed Of Sound - m/sec	Input Register	Floating Point Register (1 of 2)	Measured speed of sound of the fluid in the pipe
30036	Speed Of Sound - m/sec	Input Register	Floating Point Register (2 of 2)	Measured speed of sound of the fluid in the pipe
30037	Energy Total - Single Mode - kBtu	Input Register	Floating Point Register (1 of 2)	
30038	Energy Total - Single Mode - kBtu	Input Register	Floating Point Register (2 of 2)	
30039	Energy Total - Single Mode - MBtu	Input Register	Floating Point Register (1 of 2)	
30040	Energy Total - Single Mode - MBtu	Input Register	Floating Point Register (2 of 2)	
30041	Energy Total - Single Mode - TonHr	Input Register	Floating Point Register (1 of 2)	
30042	Energy Total - Single Mode - TonHr	Input Register	Floating Point Register (2 of 2)	
30043	Energy Total - Single Mode - MJ	Input Register	Floating Point Register (1 of 2)	
30044	Energy Total - Single Mode - MJ	Input Register	Floating Point Register (2 of 2)	
30045	Energy Total - Single Mode - kWHr	Input Register	Floating Point Register (1 of 2)	
30046	Energy Total - Single Mode - kWHr	Input Register	Floating Point Register (2 of 2)	
30047	Energy Total - Mode 1 - kBtu	Input Register	Floating Point Register (1 of 2)	

8.1 MODBUS MEMORY MAP (CONTINUED)

30048	Energy Total - Mode 1 - kBtu	Input Register	Floating Point Register (2 of 2)	
30049	Energy Total - Mode 1 - MBtu	Input Register	Floating Point Register (1 of 2)	
30050	Energy Total - Mode 1 - MBtu	Input Register	Floating Point Register (2 of 2)	
30051	Energy Total - Mode 1 - TonHr	Input Register	Floating Point Register (1 of 2)	
30052	Energy Total - Mode 1 - TonHr	Input Register	Floating Point Register (2 of 2)	
30053	Energy Total - Mode 1 - MJ	Input Register	Floating Point Register (1 of 2)	
30054	Energy Total - Mode 1 - MJ	Input Register	Floating Point Register (2 of 2)	
30055	Energy Total - Mode 1 - kWHr	Input Register	Floating Point Register (1 of 2)	
30056	Energy Total - Mode 1 - kWHr	Input Register	Floating Point Register (2 of 2)	
30057	Energy Total - Mode 2 - kBtu	Input Register	Floating Point Register (1 of 2)	
30058	Energy Total - Mode 2 - kBtu	Input Register	Floating Point Register (2 of 2)	
30059	Energy Total - Mode 2 - MBtu	Input Register	Floating Point Register (1 of 2)	
30060	Energy Total - Mode 2 - MBtu	Input Register	Floating Point Register (2 of 2)	
30061	Energy Total - Mode 2 - TonHr	Input Register	Floating Point Register (1 of 2)	
30062	Energy Total - Mode 2 - TonHr	Input Register	Floating Point Register (2 of 2)	
30063	Energy Total - Mode 2 - MJ	Input Register	Floating Point Register (1 of 2)	
30064	Energy Total - Mode 2 - MJ	Input Register	Floating Point Register (2 of 2)	
30065	Energy Total - Mode 2 - kWHr	Input Register	Floating Point Register (1 of 2)	
30066	Energy Total - Mode 2 - kWHr	Input Register	Floating Point Register (2 of 2)	
30067	Year to Date Energy Total - Single Mode - kBtu	Input Register	Floating Point Register (1 of 2)	
30068	Year to Date Energy Total - Single Mode - kBtu	Input Register	Floating Point Register (2 of 2)	
30069	Year to Date Energy Total - Single Mode - MBtu	Input Register	Floating Point Register (1 of 2)	
30070	Year to Date Energy Total - Single Mode - MBtu	Input Register	Floating Point Register (2 of 2)	
30071	Year to Date Energy Total - Single Mode - TonHr	Input Register	Floating Point Register (1 of 2)	
30072	Year to Date Energy Total - Single Mode - TonHr	Input Register	Floating Point Register (2 of 2)	
30073	Year to Date Energy Total - Single Mode - MJ	Input Register	Floating Point Register (1 of 2)	
30074	Year to Date Energy Total - Single Mode - MJ	Input Register	Floating Point Register (2 of 2)	
30075	Year to Date Energy Total - Single Mode - kWHr	Input Register	Floating Point Register (1 of 2)	
30076	Year to Date Energy Total - Single Mode - kWHr	Input Register	Floating Point Register (2 of 2)	
30077	Year to Date Energy Total - Mode 1 - kBtu	Input Register	Floating Point Register (1 of 2)	
30078	Year to Date Energy Total - Mode 1 - kBtu	Input Register	Floating Point Register (2 of 2)	
30079	Year to Date Energy Total - Mode 1 - MBtu	Input Register	Floating Point Register (1 of 2)	
30080	Year to Date Energy Total - Mode 1 - MBtu	Input Register	Floating Point Register (2 of 2)	
30081	Year to Date Energy Total - Mode 1 - TonHr	Input Register	Floating Point Register (1 of 2)	
30082	Year to Date Energy Total - Mode 1 - TonHr	Input Register	Floating Point Register (2 of 2)	
30083	Year to Date Energy Total - Mode 1 - MJ	Input Register	Floating Point Register (1 of 2)	
30084	Year to Date Energy Total - Mode 1 - MJ	Input Register	Floating Point Register (2 of 2)	
30085	Year to Date Energy Total - Mode 1 - kWHr	Input Register	Floating Point Register (1 of 2)	
30086	Year to Date Energy Total - Mode 1 - kWHr	Input Register	Floating Point Register (2 of 2)	
30087	Year to Date Energy Total - Mode 2 - kBtu	Input Register	Floating Point Register (1 of 2)	
30088	Year to Date Energy Total - Mode 2 - kBtu	Input Register	Floating Point Register (2 of 2)	
30089	Year to Date Energy Total - Mode 2 - MBtu	Input Register	Floating Point Register (1 of 2)	
30090	Year to Date Energy Total - Mode 2 - MBtu	Input Register	Floating Point Register (2 of 2)	
30091	Year to Date Energy Total - Mode 2 - TonHr	Input Register	Floating Point Register (1 of 2)	
30092	Year to Date Energy Total - Mode 2 - TonHr	Input Register	Floating Point Register (2 of 2)	
30093	Year to Date Energy Total - Mode 2 - MJ	Input Register	Floating Point Register (1 of 2)	
30094	Year to Date Energy Total - Mode 2 - MJ	Input Register	Floating Point Register (2 of 2)	
30095	Year to Date Energy Total - Mode 2 - kWHr	Input Register	Floating Point Register (1 of 2)	

8.1 MODBUS MEMORY MAP (CONTINUED)

30096	Year to Date Energy Total - Mode 2 - kWHr	Input Register	Floating Point Register (2 of 2)	
30097	Previous Year Energy Total - Single Mode - kBtu	Input Register	Floating Point Register (1 of 2)	
30098	Previous Year Energy Total - Single Mode - kBtu	Input Register	Floating Point Register (2 of 2)	
30099	Previous Year Energy Total - Single Mode - MBtu	Input Register	Floating Point Register (1 of 2)	
30100	Previous Year Energy Total - Single Mode - MBtu	Input Register	Floating Point Register (2 of 2)	
30101	Previous Year Energy Total - Single Mode - TonHr	Input Register	Floating Point Register (1 of 2)	
30102	Previous Year Energy Total - Single Mode - TonHr	Input Register	Floating Point Register (2 of 2)	
30103	Previous Year Energy Total - Single Mode - MJ	Input Register	Floating Point Register (1 of 2)	
30104	Previous Year Energy Total - Single Mode - MJ	Input Register	Floating Point Register (2 of 2)	
30105	Previous Year Energy Total - Single Mode - kWHr	Input Register	Floating Point Register (1 of 2)	
30106	Previous Year Energy Total - Single Mode - kWHr	Input Register	Floating Point Register (2 of 2)	
30107	Previous Year Energy Total - Mode 1 - kBtu	Input Register	Floating Point Register (1 of 2)	
30108	Previous Year Energy Total - Mode 1 - kBtu	Input Register	Floating Point Register (2 of 2)	
30109	Previous Year Energy Total - Mode 1 - MBtu	Input Register	Floating Point Register (1 of 2)	
30110	Previous Year Energy Total - Mode 1 - MBtu	Input Register	Floating Point Register (2 of 2)	
30111	Previous Year Energy Total - Mode 1 - TonHr	Input Register	Floating Point Register (1 of 2)	
30112	Previous Year Energy Total - Mode 1 - TonHr	Input Register	Floating Point Register (2 of 2)	
30113	Previous Year Energy Total - Mode 1 - MJ	Input Register	Floating Point Register (1 of 2)	
30114	Previous Year Energy Total - Mode 1 - MJ	Input Register	Floating Point Register (2 of 2)	
30115	Previous Year Energy Total - Mode 1 - kWHr	Input Register	Floating Point Register (1 of 2)	
30116	Previous Year Energy Total - Mode 1 - kWHr	Input Register	Floating Point Register (2 of 2)	
30117	Previous Year Energy Total - Mode 2 - kBtu	Input Register	Floating Point Register (1 of 2)	
30118	Previous Year Energy Total - Mode 2 - kBtu	Input Register	Floating Point Register (2 of 2)	
30119	Previous Year Energy Total - Mode 2 - MBtu	Input Register	Floating Point Register (1 of 2)	
30120	Previous Year Energy Total - Mode 2 - MBtu	Input Register	Floating Point Register (2 of 2)	
30121	Previous Year Energy Total - Mode 2 - TonHr	Input Register	Floating Point Register (1 of 2)	
30122	Previous Year Energy Total - Mode 2 - TonHr	Input Register	Floating Point Register (2 of 2)	
30123	Previous Year Energy Total - Mode 2 - MJ	Input Register	Floating Point Register (1 of 2)	
30124	Previous Year Energy Total - Mode 2 - MJ	Input Register	Floating Point Register (2 of 2)	
30125	Previous Year Energy Total - Mode 2 - kWHr	Input Register	Floating Point Register (1 of 2)	
30126	Previous Year Energy Total - Mode 2 - kWHr	Input Register	Floating Point Register (2 of 2)	
30127	User Defined Energy Total - Single Mode - kBtu	Input Register	Floating Point Register (1 of 2)	
30128	User Defined Energy Total - Single Mode - kBtu	Input Register	Floating Point Register (2 of 2)	
30129	User Defined Energy Total - Single Mode - MBtu	Input Register	Floating Point Register (1 of 2)	
30130	User Defined Energy Total - Single Mode - MBtu	Input Register	Floating Point Register (2 of 2)	
30131	User Defined Energy Total - Single Mode - TonHr	Input Register	Floating Point Register (1 of 2)	
30132	User Defined Energy Total - Single Mode - TonHr	Input Register	Floating Point Register (2 of 2)	
30133	User Defined Energy Total - Single Mode - MJ	Input Register	Floating Point Register (1 of 2)	
30134	User Defined Energy Total - Single Mode - MJ	Input Register	Floating Point Register (2 of 2)	
30135	User Defined Energy Total - Single Mode - kWHr	Input Register	Floating Point Register (1 of 2)	
30136	User Defined Energy Total - Single Mode - kWHr	Input Register	Floating Point Register (2 of 2)	
30137	User Defined Energy Total - Mode 1 - kBtu	Input Register	Floating Point Register (1 of 2)	
30138	User Defined Energy Total - Mode 1 - kBtu	Input Register	Floating Point Register (2 of 2)	
30139	User Defined Energy Total - Mode 1 - MBtu	Input Register	Floating Point Register (1 of 2)	
30140	User Defined Energy Total - Mode 1 - MBtu	Input Register	Floating Point Register (2 of 2)	
30141	User Defined Energy Total - Mode 1 - TonHr	Input Register	Floating Point Register (1 of 2)	
30142	User Defined Energy Total - Mode 1 - TonHr	Input Register	Floating Point Register (2 of 2)	
30143	User Defined Energy Total - Mode 1 - MJ	Input Register	Floating Point Register (1 of 2)	

8.1 MODBUS MEMORY MAP (CONTINUED)

30144	User Defined Energy Total - Mode 1 - MJ	Input Register	Floating Point Register (2 of 2)	
30145	User Defined Energy Total - Mode 1 - kWHr	Input Register	Floating Point Register (1 of 2)	
30146	User Defined Energy Total - Mode 1 - kWHr	Input Register	Floating Point Register (2 of 2)	
30147	User Defined Energy Total - Mode 2 - kBtu	Input Register	Floating Point Register (1 of 2)	
30148	User Defined Energy Total - Mode 2 - kBtu	Input Register	Floating Point Register (2 of 2)	
30149	User Defined Energy Total - Mode 2 - MBtu	Input Register	Floating Point Register (1 of 2)	
30150	User Defined Energy Total - Mode 2 - MBtu	Input Register	Floating Point Register (2 of 2)	
30151	User Defined Energy Total - Mode 2 - TonHr	Input Register	Floating Point Register (1 of 2)	
30152	User Defined Energy Total - Mode 2 - TonHr	Input Register	Floating Point Register (2 of 2)	
30153	User Defined Energy Total - Mode 2 - MJ	Input Register	Floating Point Register (1 of 2)	
30154	User Defined Energy Total - Mode 2 - MJ	Input Register	Floating Point Register (2 of 2)	
30155	User Defined Energy Total - Mode 2 - kWHr	Input Register	Floating Point Register (1 of 2)	
30156	User Defined Energy Total - Mode 2 - kWHr	Input Register	Floating Point Register (2 of 2)	
30157	Volume Total - Single Mode - Gal	Input Register	Floating Point Register (1 of 2)	
30158	Volume Total - Single Mode - Gal	Input Register	Floating Point Register (2 of 2)	
30159	Volume Total - Single Mode - Liters	Input Register	Floating Point Register (1 of 2)	
30160	Volume Total - Single Mode - Liters	Input Register	Floating Point Register (2 of 2)	
30161	Volume Total - Single Mode - ft3	Input Register	Floating Point Register (1 of 2)	
30162	Volume Total - Single Mode - ft3	Input Register	Floating Point Register (2 of 2)	
30163	Volume Total - Single Mode - m3	Input Register	Floating Point Register (1 of 2)	
30164	Volume Total - Single Mode - m3	Input Register	Floating Point Register (2 of 2)	
30165	Volume Total - Mode 1 - Gal	Input Register	Floating Point Register (1 of 2)	
30166	Volume Total - Mode 1 - Gal	Input Register	Floating Point Register (2 of 2)	
30167	Volume Total - Mode 1 - Liters	Input Register	Floating Point Register (1 of 2)	
30168	Volume Total - Mode 1 - Liters	Input Register	Floating Point Register (2 of 2)	
30169	Volume Total - Mode 1 - ft3	Input Register	Floating Point Register (1 of 2)	
30170	Volume Total - Mode 1 - ft3	Input Register	Floating Point Register (2 of 2)	
30171	Volume Total - Mode 1 - m3	Input Register	Floating Point Register (1 of 2)	
30172	Volume Total - Mode 1 - m3	Input Register	Floating Point Register (2 of 2)	
30173	Volume Total - Mode 2 - Gal	Input Register	Floating Point Register (1 of 2)	
30174	Volume Total - Mode 2 - Gal	Input Register	Floating Point Register (2 of 2)	
30175	Volume Total - Mode 2 - Liters	Input Register	Floating Point Register (1 of 2)	
30176	Volume Total - Mode 2 - Liters	Input Register	Floating Point Register (2 of 2)	
30177	Volume Total - Mode 2 - ft3	Input Register	Floating Point Register (1 of 2)	
30178	Volume Total - Mode 2 - ft3	Input Register	Floating Point Register (2 of 2)	
30179	Volume Total - Mode 2 - m3	Input Register	Floating Point Register (1 of 2)	
30180	Volume Total - Mode 2 - m3	Input Register	Floating Point Register (2 of 2)	
30181	Year to Date Volume Total - Single Mode - Gal	Input Register	Floating Point Register (1 of 2)	
30182	Year to Date Volume Total - Single Mode - Gal	Input Register	Floating Point Register (2 of 2)	
30183	Year to Date Volume Total - Single Mode - Liters	Input Register	Floating Point Register (1 of 2)	
30184	Year to Date Volume Total - Single Mode - Liters	Input Register	Floating Point Register (2 of 2)	
30185	Year to Date Volume Total - Single Mode - ft3	Input Register	Floating Point Register (1 of 2)	
30186	Year to Date Volume Total - Single Mode - ft3	Input Register	Floating Point Register (2 of 2)	
30187	Year to Date Volume Total - Single Mode - m3	Input Register	Floating Point Register (1 of 2)	
30188	Year to Date Volume Total - Single Mode - m3	Input Register	Floating Point Register (2 of 2)	
30189	Year to Date Volume Total - Mode 1 - Gal	Input Register	Floating Point Register (1 of 2)	
30190	Year to Date Volume Total - Mode 1 - Gal	Input Register	Floating Point Register (2 of 2)	
30191	Year to Date Volume Total - Mode 1 - Liters	Input Register	Floating Point Register (1 of 2)	

8.1 MODBUS MEMORY MAP (CONTINUED)

30192	Year to Date Volume Total - Mode 1 - Liters	Input Register	Floating Point Register (2 of 2)	
30193	Year to Date Volume Total - Mode 1 - ft3	Input Register	Floating Point Register (1 of 2)	
30194	Year to Date Volume Total - Mode 1 - ft3	Input Register	Floating Point Register (2 of 2)	
30195	Year to Date Volume Total - Mode 1 - m3	Input Register	Floating Point Register (1 of 2)	
30196	Year to Date Volume Total - Mode 1 - m3	Input Register	Floating Point Register (2 of 2)	
30197	Year to Date Volume Total - Mode 2 - Gal	Input Register	Floating Point Register (1 of 2)	
30198	Year to Date Volume Total - Mode 2 - Gal	Input Register	Floating Point Register (2 of 2)	
30199	Year to Date Volume Total - Mode 2 - Liters	Input Register	Floating Point Register (1 of 2)	
30200	Year to Date Volume Total - Mode 2 - Liters	Input Register	Floating Point Register (2 of 2)	
30201	Year to Date Volume Total - Mode 2 - ft3	Input Register	Floating Point Register (1 of 2)	
30202	Year to Date Volume Total - Mode 2 - ft3	Input Register	Floating Point Register (2 of 2)	
30203	Year to Date Volume Total - Mode 2 - m3	Input Register	Floating Point Register (1 of 2)	
30204	Year to Date Volume Total - Mode 2 - m3	Input Register	Floating Point Register (2 of 2)	
30205	Previous Year Volume Total - Single Mode - Gal	Input Register	Floating Point Register (1 of 2)	
30206	Previous Year Volume Total - Single Mode - Gal	Input Register	Floating Point Register (2 of 2)	
30207	Previous Year Volume Total - Single Mode - Liters	Input Register	Floating Point Register (1 of 2)	
30208	Previous Year Volume Total - Single Mode - Liters	Input Register	Floating Point Register (2 of 2)	
30209	Previous Year Volume Total - Single Mode - ft3	Input Register	Floating Point Register (1 of 2)	
30210	Previous Year Volume Total - Single Mode - ft3	Input Register	Floating Point Register (2 of 2)	
30211	Previous Year Volume Total - Single Mode - m3	Input Register	Floating Point Register (1 of 2)	
30212	Previous Year Volume Total - Single Mode - m3	Input Register	Floating Point Register (2 of 2)	
30213	Previous Year Volume Total - Mode 1 - Gal	Input Register	Floating Point Register (1 of 2)	
30214	Previous Year Volume Total - Mode 1 - Gal	Input Register	Floating Point Register (2 of 2)	
30215	Previous Year Volume Total - Mode 1 - Liters	Input Register	Floating Point Register (1 of 2)	
30216	Previous Year Volume Total - Mode 1 - Liters	Input Register	Floating Point Register (2 of 2)	
30217	Previous Year Volume Total - Mode 1 - ft3	Input Register	Floating Point Register (1 of 2)	
30218	Previous Year Volume Total - Mode 1 - ft3	Input Register	Floating Point Register (2 of 2)	
30219	Previous Year Volume Total - Mode 1 - m3	Input Register	Floating Point Register (1 of 2)	
30220	Previous Year Volume Total - Mode 1 - m3	Input Register	Floating Point Register (2 of 2)	
30221	Previous Year Volume Total - Mode 2 - Gal	Input Register	Floating Point Register (1 of 2)	
30222	Previous Year Volume Total - Mode 2 - Gal	Input Register	Floating Point Register (2 of 2)	
30223	Previous Year Volume Total - Mode 2 - Liters	Input Register	Floating Point Register (1 of 2)	
30224	Previous Year Volume Total - Mode 2 - Liters	Input Register	Floating Point Register (2 of 2)	
30225	Previous Year Volume Total - Mode 2 - ft3	Input Register	Floating Point Register (1 of 2)	
30226	Previous Year Volume Total - Mode 2 - ft3	Input Register	Floating Point Register (2 of 2)	
30227	Previous Year Volume Total - Mode 2 - m3	Input Register	Floating Point Register (1 of 2)	
30228	Previous Year Volume Total - Mode 2 - m3	Input Register	Floating Point Register (2 of 2)	
30229	User Defined Volume Total - Single Mode - Gal	Input Register	Floating Point Register (1 of 2)	
30230	User Defined Volume Total - Single Mode - Gal	Input Register	Floating Point Register (2 of 2)	
30231	User Defined Volume Total - Single Mode - Liters	Input Register	Floating Point Register (1 of 2)	
30232	User Defined Volume Total - Single Mode - Liters	Input Register	Floating Point Register (2 of 2)	
30233	User Defined Volume Total - Single Mode - ft3	Input Register	Floating Point Register (1 of 2)	
30234	User Defined Volume Total - Single Mode - ft3	Input Register	Floating Point Register (2 of 2)	
30235	User Defined Volume Total - Single Mode - m3	Input Register	Floating Point Register (1 of 2)	
30236	User Defined Volume Total - Single Mode - m3	Input Register	Floating Point Register (2 of 2)	
30237	User Defined Volume Total - Mode 1 - Gal	Input Register	Floating Point Register (1 of 2)	
30238	User Defined Volume Total - Mode 1 - Gal	Input Register	Floating Point Register (2 of 2)	
30239	User Defined Volume Total - Mode 1 - Liters	Input Register	Floating Point Register (1 of 2)	

8.1 MODBUS MEMORY MAP (CONTINUED)

30240	User Defined Volume Total - Mode 1 - Liters	Input Register	Floating Point Register (2 of 2)	
30241	User Defined Volume Total - Mode 1 - ft3	Input Register	Floating Point Register (1 of 2)	
30242	User Defined Volume Total - Mode 1 - ft3	Input Register	Floating Point Register (2 of 2)	
30243	User Defined Volume Total - Mode 1 - m3	Input Register	Floating Point Register (1 of 2)	
30244	User Defined Volume Total - Mode 1 - m3	Input Register	Floating Point Register (2 of 2)	
30245	User Defined Volume Total - Mode 2 - Gal	Input Register	Floating Point Register (1 of 2)	
30246	User Defined Volume Total - Mode 2 - Gal	Input Register	Floating Point Register (2 of 2)	
30247	User Defined Volume Total - Mode 2 - Liters	Input Register	Floating Point Register (1 of 2)	
30248	User Defined Volume Total - Mode 2 - Liters	Input Register	Floating Point Register (2 of 2)	
30249	User Defined Volume Total - Mode 2 - ft3	Input Register	Floating Point Register (1 of 2)	
30250	User Defined Volume Total - Mode 2 - ft3	Input Register	Floating Point Register (2 of 2)	
30251	User Defined Volume Total - Mode 2 - m3	Input Register	Floating Point Register (1 of 2)	
30252	User Defined Volume Total - Mode 2 - m3	Input Register	Floating Point Register (2 of 2)	
30253	Auxiliary Pulse Input Count- Input 1	Input Register	Floating Point Register (1 of 2)	Unitless count. Value is representative of the total number of pulses received on input.
30254	Auxiliary Pulse Input Count- Input 1	Input Register	Floating Point Register (2 of 2)	Unitless count. Value is representative of the total number of pulses received on input.
30255	Auxiliary Pulse Input Count- Input 2	Input Register	Floating Point Register (1 of 2)	Unitless count. Value is representative of the total number of pulses received on input.
30256	Auxiliary Pulse Input Count- Input 2	Input Register	Floating Point Register (2 of 2)	Unitless count. Value is representative of the total number of pulses received on input.
30257	Auxiliary Pulse Input Count- Input 3	Input Register	Floating Point Register (1 of 2)	Unitless count. Value is representative of the total number of pulses received on input.
30258	Auxiliary Pulse Input Count- Input 3	Input Register	Floating Point Register (2 of 2)	Unitless count. Value is representative of the total number of pulses received on input.
30259	Run Hours	Input Register	Floating Point Register (1 of 2)	
30260	Run Hours	Input Register	Floating Point Register (2 of 2)	
30261	Meter Status	Input Register	Short Integer Register	0 Normal 1 Low Supply Temperature 2 High Supply Temperature 3 Low Return Temperature 4 High Return Temperature 5 Delta T < Minimum 6 High Energy Rate 7 Low Signal Quality 8 Comm Error 9 Low Supply Voltage 10 System Fault

8.2 DIAGNOSTIC FUNCTION CODE

The MODBUS implementation of the System-40 supports the use of function code 08, Diagnostic.

When using function code 08, you must also specify the "sub-function" code when sending the message to the System-40.

The following sub-functions are supported by the System-40:

Sub-function Code		Name
Hex	Decimal	
00	00	Return Query Data
01	01	Restart Communications Option
04	04	Force Listen Only Mode
0B	11	Return Bus Message Count*
0C	12	Return Bus Communication Error Count*
0D	13	Return Bus Exception Error Count*
0E	14	Return Server Message Count**
0F	15	Return Server No Response Count**
11	17	Return Server Busy Count**
12	18	Return Bus Character Overrun Count**

* Count available in System-40 diagnostic menu page 1.
** Count available in System-40 diagnostic menu page 2.

Description of Sub-functions:
00 Return Query Data

The data passed to the System-40 in the request data field is to be returned (looped back) in the response. The entire response message should be identical to the request.

01 Restart Communications Option

The System-40 serial line port will be initialized and restarted, and all of its communications event counters are cleared. If the port is currently in Listen Only Mode, no response is returned. This function is the only one that brings the port out of Listen Only Mode. If the port is not currently in Listen Only Mode, a normal response is returned. This occurs before the restart is executed.

04 Force Listen Only Mode

Forces the System-40 to its Listen Only Mode for MODBUS communications. This isolates it from the other devices on the network, allowing them to continue communicating without interruption from the addressed System-40. No response is returned. When the remote device enters its Listen Only Mode, all active communication controls are turned off. The Ready watchdog timer is allowed to expire, locking the controls off. While the device is in this mode, any MODBUS messages addressed to it or broadcast are monitored, but no actions will be taken and no responses will be sent.

The only function that will be processed after the mode is entered will be the Restart Communications Option function (function code 8, sub-function 1).

11 (0B Hex) Return Bus Message Count

The response data field from the System-40 returns the quantity of messages that it has detected on the communications system since its last restart, restart communications option, or power-up.

This count is also available in the System-40's diagnostic menu page.

12 (0C Hex) Return Bus Communication Error Count

The response data field returns the quantity of CRC errors encountered by the System-40 since its last restart, restart communications option, or power-up.

This count is also available in the System-40's diagnostic menu page.

8.2 DIAGNOSTIC FUNCTION CODE (CONTINUED)

13 (0D Hex) Return Bus Exception Error Count

The response data field returns the quantity of MODBUS exception responses returned by the System-40 since its last restart, restart communications option, or power-up.

This count is also available in the System-40's diagnostic menu page.

14 (0E Hex) Return Server Message Count

The response data field returns the quantity of messages addressed to the System-40, or broadcast, that the System-40 has processed since its last restart, restart communications option, or power-up.

This count is also available in the System-40's diagnostic menu page.

15 (0F Hex) Return Server No Response Count

The response data field returns the quantity of messages addressed to the System-40 for which it has returned no response (neither a normal response nor an exception response), since its last restart, restart communications option, or power-up.

This count is also available in the System-40's diagnostic menu page.

17 (11 Hex) Return Server Busy Count

The response data field returns the quantity of messages addressed to the System-40 for which it returned a Server Device Busy exception response, since its last restart, restart communications option, or power-up.

This count is also available in the System-40's diagnostic menu page.

18 (12 Hex) Return Bus Character Overrun Count

The response data field returns the quantity of messages addressed to the System-40 that it could not handle due to a character overrun condition, since its last restart, restart communications option, or power-up. A character overrun is caused by data characters arriving at the port faster than they can be stored, or by the loss of a character due to a hardware malfunction.

This count is also available in the System-40's diagnostic menu page.

8.3 REPORT SLAVE ID FUNCTION CODE

The MODBUS implementation of the System-40 supports the use of function code 17, Report Slave ID. When a message is sent to the System-40 requesting to report the slave ID, the following information is returned:

System-40-XXXXXX; where XXXXXX - serial number of the System-40

The System-40 will report data in decimal or HEX, depending on the control system settings. The data must be converted from decimal/HEX to ASCII in order to form the string.