SYSTEM-10

BTU Meter
Installation and Operation Guide

ONICON
Flow and Energy Measurement

DOC-0002341 Rev.F

SAFETY INFORMATION

The System-10 BTU Meter was calibrated at the factory before shipment. To ensure correct use of the system, please read this manual thoroughly.

Regarding this manual:

- This manual should be passed on to the end user.
- Before use, read this manual thoroughly to comprehend its contents.
- The contents of this manual may be changed without prior notice.
- All rights reserved. No part of this manual may be reproduced in any form without ONICON Incorporated's written permission.
- ONICON Incorporated makes no warranty of any kind with regard to this material, including, but not limited to, implied warranties of merchantability and suitability for a particular purpose.
- All reasonable effort has been made to ensure the accuracy of the contents of this manual. However, if any errors are found, please inform ONICON Incorporated.
- ONICON Incorporated assumes no responsibilities for this product except as stated in the warranty.
- If the customer or any third party is harmed by the use of this product, ONICON Incorporated assumes no responsibility for any such harm owing to any defects in the product which were not predictable, or for any indirect damages.

SAFETY PRECAUTIONS:

The following general safety precautions must be observed during all phases of installation, operation, service, and repair of this product. Failure to comply with these precautions or with specific WARNINGS given elsewhere in this manual violates safety standards of design, manufacture, and intended use of the product. ONICON Incorporated assumes no liability for the customer's failure to comply with these requirements. If this product is used in a manner not specified in this manual, the protection provided by this product may be impaired.

The following messages are used in this manual:

WARNING
Messages identified as "WARNING" contain information regarding the personal safety of individuals involved in the installation, operation or service of this product.

CAUTION
Messages identified as "CAUTION" contain information regarding potential damage to the product or other ancillary products.

IMPORTANT NOTE
Messages identified as "IMPORTANT NOTE" contain information critical to the proper operation of the product.

TABLE OF CONTENTS

SECTION 1.0 GENERAL INFORMATION 5
1.1 PURPOSE OF THIS MANUAL 5
1.2 TYPICAL SYSTEM-10 BTU METER 5
1.3 STANDARD FEATURES AND SPECIFICATIONS 6
1.4 MODEL NUMBERING SYSTEM 8
1.5 ADDITIONAL REQUIRED HARDWARE 9
1.6 WORKING ENVIRONMENT 9
1.7 SERIAL NUMBER 9

SECTION 2.0 UNPACKING 10
2.1 CHECKING THAT YOU HAVE RECEIVED EVERYTHING 10
2.1.1 Documentation 10
2.1.2 Calibration Information 10
2.1.3 The System-10 BTU Meter 11
2.1.4 Temperature Sensors 11
2.1.5 Temperature Thermowells Installation Hardware 11
2.1.6 Flow Meter 11

SECTION 3.0 INSTALLATION 12
3.1 SITE SELECTION 12
3.1.1 The System-10 BTU Meter 12
3.1.2 The Flow Meter 12
3.1.3 The Temperature Sensors 12
3.2 MECHANICAL INSTALLATION 13
3.2.1 Transmitter Details and Dimensions 13
3.2.2 Thermowell Installation 14
3.2.2.1 Dry Tap Thermowells 14
3.2.2.2 Hot Tap Thermowells 14
3.2.3 Temperature Sensor Installation 17
3.2.4 Flow Meter Installation 17
3.3 ELECTRICAL INSTALLATION 18
3.3.1 Input Power Requirements 18
3.3.2 Input Signal Connections 19
3.3.2.1 Input Signal Connections from Temperature Sensors 19
3.3.2.2 Input Signal Connections From F-1000 Series Flow Meters 20
3.3.2.3 Input Signal Connections From F-2000 Series (Loop Powered Versions) Flow Meters 21
3.3.2.4 Input Signal Connections from FT-3100/3200 Series Flow Meters 22
3.3.2.5 Input Signal Connections from FT-3400 Flow Meters 23
3.3.2.6 Input Signal Connections from FSM-3 Series Flow Meters 24
3.3.2.7 Input Signal Connections from F-4300 Flow Meters 25
3.3.2.8 Input Signal Connections From FT-4600 Flow Meters 26
3.3.2.9 Input Signal Connections From F-4600 (LCD Display Versions) Flow Meters 27
3.3.3 Contact Closure Input For Flow Direction 28
3.3.4 Contact Closure Output For Energy Total(s) And Mode Status 28
3.3.5 Optional Isolated Analog Output(s) 29

SECTION 4.0 START-UP AND COMMISSIONING 30
4.1 DISPLAY AND USER INTERFACE 30
4.2 PROCESSOR START-UP 30
4.3 UNITS AND MULTIPLIERS 31
4.4 ANALOG OUTPUTS 31
4.5 SELECTING THE FLOW METER LOCATION & ENABLING/DISABLING FRONT PANEL RESET 32
4.6 COMMISSIONING 33
4.6.1 Commissioning Procedure 33
4.6.2 Commissioning Worksheet 35

SECTION 5.0 DIAGNOSTICS 36
5.1 DIAGNOSTICS 36
5.1.1 Diagnostic Lights 36
5.1.2 Flow Test Signals 36
5.1.3 Temperature Test Signals 36
5.2 ALARM STATUS MENU PAGE 37
5.3 TROUBLESHOOTING 38

APPENDIX A – DRAWINGS 39
OUTDOOR THERMOWELL ASSEMBLY IN WELDED PIPE A-1
HEAVY DUTY THERMOWELL ASSEMBLY FOR PROCESS TEMPERATURES OVER 300°F ..... A-2&3
SYSTEM-10 BTU METER MOTHER BOARD A-4
SYSTEM-10 BTU METER COMM BOARD A-5
SYSTEM-10 BTU METER POWER SUPPLY BOARD A-6
SYSTEM-10 BTU METER ANALOG OUTPUT BOARD WITH 1 ANALOG OUTPUT A-7
SYSTEM-10 BTU METER ANALOG OUTPUTS BOARD WITH 4 ANALOG OUTPUTS A-8

SECTION 1.0 GENERAL INFORMATION

We at ONICON Incorporated would like to thank you for purchasing our quality American made System-10 BTU Meter. As our valued customer, our commitment to you is to provide fast reliable service, while continuing to offer quality products to meet your growing flow measurement needs.

1.1 PURPOSE OF THIS MANUAL

The purpose of this guide is to provide installation and commissioning procedures and basic operating and servicing instructions for the ONICON System-10 BTU Meter.

WARNING
Only qualified service personnel should attempt to install or service this product. Serious injury may result from the improper Installation or use of this product.

1.2 TYPICAL SYSTEM-10 BTU METER

ONICON'S System-10 is a true heat (BTU) computer, which accepts data from several sensors, performs a series of computations with that data, and displays and/or transmits the results as an indication of the amount of heat (BTU's) being transferred per unit time or as a totalized amount.

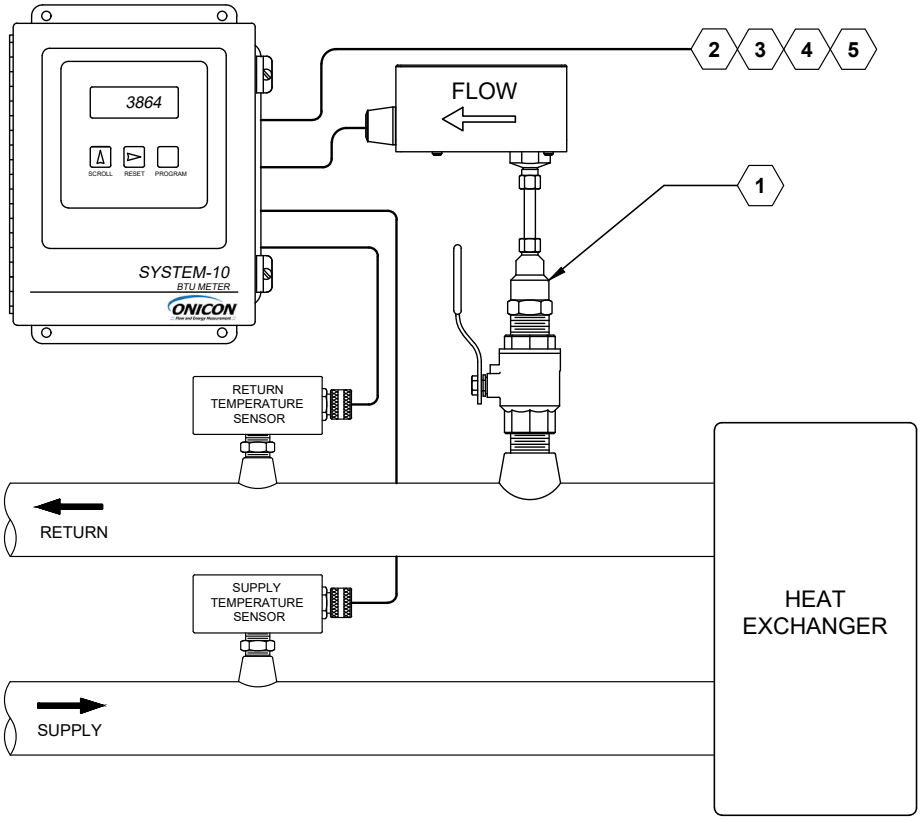

1. ONICON insertion flow meter (ordered separately)
2. Provide a Class 2 power supply with sufficient power for the connected flow meter:
   - 24 VAC: 20-28 VAC, 50/60 Hz, 12 VA
   - 120 VAC: 108-132 VAC, 50/60 Hz, 15 VA
   - 240 VAC: 207-253 VAC, 50/60 Hz, 15 VA
3. Optional serial communications:
   - BACnet MS/TP or BACnet IP
   - MODBUS RTU or MODBUS TCP/IP
   - Siemens P1
   - JCI N2
   - DualNet, IP and RS485 (BACnet/ MODBUS)
4. Outputs are available for Energy Total, Energy Rate, Flow Rate, Supply Temp, Return Temp, and Delta-T.

1.3 STANDARD FEATURES AND SPECIFICATIONS*

SYSTEM-10 TRANSMITTER		
PERFORMANCE	CALCULATOR ACCURACY	Computing nonlinearity within ±0.05% Calculator meets EN1434 CSA C900.1 Class 1 accuracy requirements for 2K sensors for all applications.
	TEMPERATURE ACCURACY	Overall differential temperature measurement uncertainty of ≤ ±0.15°F over the stated range. (Includes uncertainty associated with the sensors, transmitters, cable and calculator input circuitry).
	ONICON CURRENT BASED TEMPERATURE SENSOR ACCURACY	Temperature sensors meet EN1434/CSA C900.1 accuracy requirements for 1K sensors for cooling applications, 32°F to 77°F. Temperature sensors meet EN1434/CSA C900.1 accuracy requirements for 2K sensors for heating applications, 140°F to 212°F.
OPERATING CONDITIONS	AMBIENT TEMPERATURE	-20°F to 140°F
	FLUID TEMPERATURE	25°F to 400°F. Fluid temperature ranges vary based on application. See 1.4 MODEL NUMBERING SYSTEM for more details.
INPUT POWER**	24 VAC	20-28 VAC @ 50/60 Hz, 12 VA
	120 VAC	108-132 VAC @ 50/60 Hz, 15 VA
	240 VAC	207-253 VAC @ 50/60 Hz, 15 VA
I/O SIGNAL**	ISOLATED SOLID STATE DRY CONTACT PULSE OUTPUT(S)	Three (3) pulse outputs available. Mode 1: scaled pulse output for Energy Total. Mode 2: scaled pulse output for Energy Total. Mode Status: indicates mode 1 or mode 2 operation. Contact ratings: 100 mA, 50V max. Pulse duration: 0.5, 1, 2 or 6 sec (field programmable)
	ISOLATED ANALOG OUTPUT(S)	Optional one (1) or four (4) analog output board. Available for: Flow Rate, Energy Rate, Supply Temp, Return Temp and Delta-T. Output type: Field selectable 4-20 mA, or 0-10 V. Note: 0-5 V also available with 4 A/O option.
ELECTRONICS ENCLOSURE**	AVAILABLE OPTIONS	• NEMA 13 enclosure with LCD display • NEMA 4 enclosure with LCD display Both options include four (4) 3/4" conduit openings
	DISPLAY	White, backlit, 16-character alpha, 8-line numeric LCD displays total energy, total flow, energy rate, flow rate, supply temperature, return temperature, serial number and alarm status.
	MEMORY	Non-volatile EEPROM memory retains all program parameters and totalized values in the event of power loss.
PROGRAMMING	Field programmable via front panel interface with factory programmed for specific application	

***** SPECIFICATIONS subject to change without notice.
**See model codification for additional information regarding option selections.

1.3 STANDARD FEATURES AND SPECIFICATIONS (CONTINUED)*

SYSTEM-10 TRANSMITTER (CONTINUED)		
ELECTRICAL CONNECTIONS	INPUT POWER	24 VAC input power: Use PVC jacketed copper cable with a wire gauge suitable for the length of run and required maximum current carrying capacity. The installation must comply with all local, state and federal building codes. 120/240 VAC input power: Use a three (3) wire service with one (1) wire a protective earth ground. The installation must comply with all local, state and federal building codes.
	TEMPERATURE SIGNALS	Use 18-22 ga. twisted shielded pair
	FLOW SIGNALS	Use 18-22 ga. shielded cable. See flow meter specification sheet or flow meter IOM for the correct number of conductors.
TEMPERATURE SENSOR**	Solid state sensors are custom calibrated using NIST traceable temperature standard. Current based signal (mA) is unaffected by wire length.	
NETWORK CONNECTIONS**	AVAILABLE OPTIONS	• BACnet MS/TP or BACnet IP • MODBUS RTU or MODBUS TCP/IP • Siemens Apogee - P1 FLN • Johnson Controls Metasys - N2 • DualNet, IP and RS485 (BACnet/ MODBUS)
APPROVALS	c UL us LISTED NEMA 13 ENCLOSURE VERSION ONLY	

***** SPECIFICATIONS subject to change without notice.
**See model codification for additional information regarding option selections.

1.4 MODEL NUMBERING SYSTEM

Meter Model Number Coding = SYS-10-ABCD-EFGG

A = Electronics Enclosure
- 1 = NEMA 13 enclosure with LCD display
- 2 = NEMA 4 enclosure with LCD display

B = Input Power
- 1 = 24 VAC, 12 VA
- 2 = 120 VAC, 15 VA
- 3 = 240 VAC, 15 VA

C = Serial Communications
- 0 = No serial communications provided
- 1 = RS485, BACnet MS/TP
- 2 = RS485, MODBUS RTU
- 3 = BACnet IP
- 4 = MODBUS TCP/IP
- 5 = DualNet serial communications, IP and RS485
- 6 = JCI N2
- 7 = Siemens P1

D = Analog Output
- 0 = No analog output
- 1 = Single (1) isolated analog output
- 2 = Four (4) isolated analog outputs (Not available when C=5)

E = Auxiliary Pulse Inputs
- 0 = (1) Directional pulse input only
- 1 = (1) Directional pulse and auxiliary pulse input (Not availalbe when C = 0)

F = Auxiliary Pulse Outputs
- 1 = Three (3) pulse outputs, dry contact

GG = Temperature Sensor
- 01 = Matched pair of current (mA) based sensors, CHW/CW range
- 02 = Matched pair of current (mA) based sensors, HHW range
- S1 = Matched pair of current (mA) based sensors, 122°F to 302°F range
- S4 = Matched pair of current (mA) based sensors, 80°F to 400°F range

1.5 ADDITIONAL REQUIRED HARDWARE

ONICON offers a wide variety of flow meters to satisfy most hydronic energy metering applications.

Flow Meter Model	Line Sizes	Straight Run Required	Notes
F-1100 Single Turbine Insertion Flow Meter	1¼″ and larger	25	Can be used in 1" copper lines
F-1200 Dual Turbine Insertion Flow Meter	2½″ and larger	15	
F-11XX Inline Turbine Flow Meter	¾″ and 1″	25	
FT-3400 Insertion Electromagnetic Flow Meter	1¼″ and larger	See manual	
FSM-3 Series SuperMag Electromagnetic Flow Meter	6" - 12"	See manual	
FT-3000 Series Inline Electromagnetic Flow Meter	¼″ and larger	5	
F-2600 Inline Vortex Flow Meter	½" - 8"	See manual	
F-2700 Insertion Vortex Flow Meter	3" - 16"	See manual	
F-4300 Clamp-on Ultrasonic Flow Meter	½" and larger	See manual	
FT-4600 / F-4600 Inline Ultrasonic Flow Meter	½"- 2½"	See manual	

Please refer to ONICON's flow meter IOM, or contact ONICON for help in selecting the flow meter that will best fit your requirements.

1.6 WORKING ENVIRONMENT

The System-10 was designed for installation and use in typical industrial environments that are free of corrosive liquids and fumes, direct liquid exposure, temperature extremes and vibrations. Do not expose the meter to direct sunlight.

The operating ambient air temperature range is -20° F to 140° F. The electrical power should be relatively clean, free of high frequency noise, large voltage transients, and protected from power surges and brown outs.

1.7 SERIAL NUMBER

The System-10's serial number is a unique identifier for the product, and is located outside and inside the enclosure. All components (flow meter, temperature sensors, and main unit) should bear identical serial numbers if ordered together. Please have this number available when contacting ONICON for assistance.

SECTION 2.0 UNPACKING

The System-10 BTU Meter will be shipped in a single package unless optional hardware or equipment is ordered (thermowells may have been shipped in advance). Please open the package with caution to avoid damaging their contents. If any item is damaged upon receipt, notify the shipping company immediately and alert the ONICON customer service department. Most products are shipped insured unless the customer specifically requests otherwise.

IMPORTANT NOTE
Flow meters are packed separately.

2.1 CHECKING THAT YOU HAVE RECEIVED EVERYTHING

2.1.1 Documentation

Enclosed with each System-10 meter is a comprehensive documentation package that includes the following items:

- Installation and Operation Guide
- BTU Meter Certificate of Calibration

Please notify ONICON if either of these items is missing.

2.1.2 Calibration Information

ONICON
Flow and Energy Measurement

BTU METER
CERTIFICATE OF CALIBRATION

METER INFORMATION
Meter Tag: BTU 30th Floor
BTU Meter Model: SYS-10-1110-01O1
Serial No: 001008430
Attached Flow Meter Model:
Serial No:

SPECIFIED INSTALLATION & OPERATING PARAMETERS
Pipe Information: 2 Inch Inline Copper
Design Maximum Flow Rate: 125.0 GPM
Design Supply Temperature: MODE 1: 93°F
Design Return Temperature: MODE 1: 82°F
Fluid: Water
Fluid Specific Heat: 1.000 BTU/lb°F
Fluid Density: 62.14 lb/ft³

CALIBRATION DATA
Firmware Version: DDB3.4
Communications Protocol: BACnet-MS/TP
Device Network Address: 090
Display Units & Multipliers:
Energy Total: BTU x 10K Energy Rate: BTU/HR x 1K
Flow Total: GALLONS x 10 Flow Rate: GPM x 1
Temperature: °F
Damping: 5
Pulse Duration: 500 ms
Supply Temperature Slope: 9.984 Offset: -0.070
Return Temperature Slope: 10.011 Offset: 0.040
Flow Diagnostic Test Output (60 Hz): NA

OUTPUT SIGNAL SCALING
Energy Total(s): 1 Pulse = BTU x 10K
Flow Rate: NA
Energy Rate: NA
Supply T: NA
Return T: NA
Delta T: NA

Calibrated By: Curtis R. McElhattan Date: 06/07/2018
Curtis R. McElhattan

ONICON Incorporated certifies that the flow and temperature sensors provided with this Btu meter have been individually calibrated based on the application specific data provided above; using standards directly traceable to the U.S. National Institute of Standards and Technology (N.I.S.T.).

11451 Belcher Road South, Largo, Florida 33773 Tel (727) 447-6140 Fax (727) 442-5699

The ONICON System-10 BTU Meter is a custom calibrated system. Unless specifically noted in writing by ONICON, all components (BTU meter, flow meter, and temperature sensors) share the same serial number and must be installed together as a system. Mixing components from different systems will result in significant errors in calibration.

2.1.3 The System-10 BTU Meter

Remove the System-10 from the shipping carton and inspect it for physical damage. Notify the freight carrier and ONICON immediately if any items are damaged in transit. Save all packaging.

BTU meters ordered with a flow meter and temperature sensors will be delivered configured and programmed for use together as a system. The System-10 and the temperature sensor serial numbers will match. The flow meter serial number will be shown on the certificate of calibration and on the System-10 display.

2.1.4 Temperature Sensors

If ordered, temperature sensors will generally be packed in the same carton with the System-10. Inspect the sensors and cables for damage. Each sensor will have a label attached with a serial number.

2.1.5 Temperature Thermowells Installation Hardware

Temperature thermowells installation hardware are frequently shipped in advance of the meter(s). Otherwise, the Dry Tap thermowells installation hardware are packed with the System-10 meter. Optional Hot Tap thermowells will be shipped in a separate box.

2.1.6 Flow Meter

The flow meter will be packaged in a separate carton. The flow meter ordered with this BTU meter came complete with an instruction manual. Please refer to it for detailed information regarding its installation, commissioning, and operation.

Each BTU meter is calibrated to a specific flow meter and must be used together as a system. If the flow meter and BTU meter were purchased together, the serial number on the flow meter should match the serial number on the label mounted directly on the BTU meter.

SECTION 3.0 INSTALLATION

The System-10 BTU Meter should be installed by experienced contractors with related knowledge and experience in hydronic heating and cooling systems, and fluid metering applications in general. Contact ONICON for installation assistance.

The installer should use good trade practices and must adhere to all state and local building or other applicable codes.

3.1 SITE SELECTION

Careful attention to the site selection for the system components will help the installers with the initial installation, reduce start-up problems, and make future maintenance easier.

When selecting a site for mounting, consider the criteria under Section 1.6 WORKING ENVIRONMENT, as well as the following.

IMPORTANT NOTE
Proper site selection is critical to the performance of this BTU meter. Both the flow meter and the two temperature sensors must be properly located within the piping system in order to ensure an accurate energy measurement.

3.1.1 The System-10 BTU Meter

Find an easily accessible location where wire connections can be made and meter readings can be taken from floor level. Mount the System-10 enclosure on a vibration free surface. Avoid locations such as the plenum of a fan coil, heat exchanger or any housing that may contain electric motors or other strong sources of electrical interference.

3.1.2 The Flow Meter

When properly installed, the flow meter will only measure flow associated with that portion of the piping system for which the energy measurement is being made. The flow meter may be installed in either the supply or return line. Choose the location with the longest straight run of unobstructed pipe. Please refer to 1.5 ADDITIONAL REQUIRED HARDWARE and to the flow meter IOM for specific information regarding the straight run requirements.

3.1.3 The Temperature Sensors

The two temperature sensors must be located in such a manner as to accurately measure only the temperature of the supply line entering and the return line leaving the portion of the piping system for which the energy measurement is being made.

If possible, find an easily accessible location where wire connections can be made from floor level. This will facilitate any future service. Place the temperature sensors away from strong sources of electrical noise that might affect the performance of the sensors.

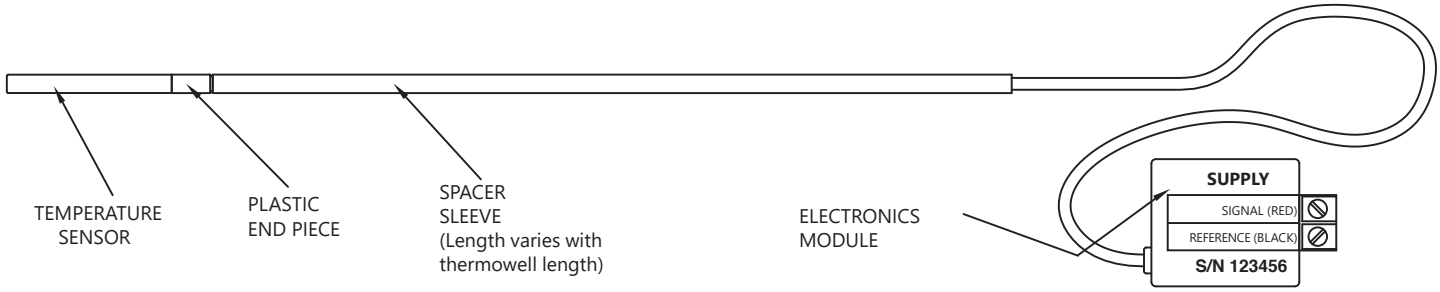

One temperature sensor thermowell will need to be placed in the same pipe with the flow meter. It should be located on the downstream side of the flow meter. The downstream distance between the thermowell and flow meter should be at least five pipe diameters, leaving enough clearance to remove either sensor from the pipe without interference from the other sensor.

3.2 MECHANICAL INSTALLATION

IMPORTANT NOTE
The components of the ONICON System-10 BTU Meter must be configured, programmed and installed together as a system. Mixing components from different systems may result in significant measurement errors.

3.2.1 Transmitter Details and Dimensions

The mounting surface must be structurally sound and capable of withstanding a minimum weight of 40lbs (18kg). Use the following screws for mounting.

(4) Machine screws - HHMS .25-20 x 1.5”
(4) Wood screws - FHLS .25 x 1.5”
(4) Concrete screws - HHCS .25 x 1.5”

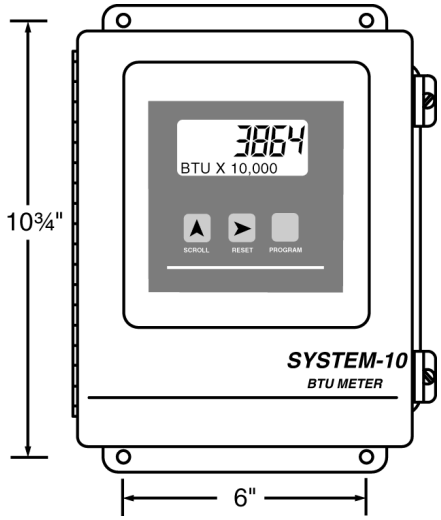

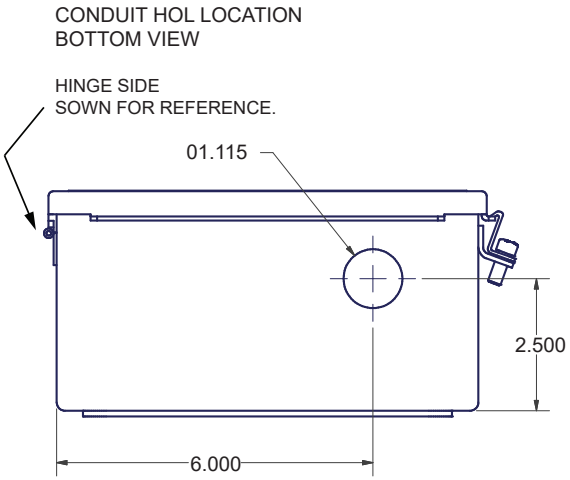

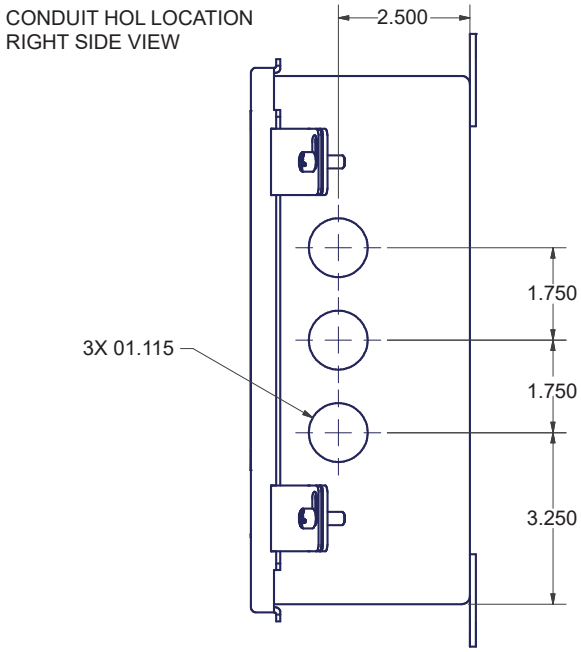

CAUTION
DO NOT drill holes in the enclosure. Use only the openings that are provided.

3.2.2 Thermowell Installation

IMPORTANT NOTE
It is important that no dirt or other foreign material be allowed into the thermowells as this could affect the thermal response of the system.

3.2.2.1 Dry Tap Thermowells

Dry tap thermowells are for new construction or scheduled shutdown. The most common installation methods are shown below. Refer to Appendix A-1 for thermal insulator installations and Appendix A-2 for high temperature (>300°F) thermowell installations. Consult ONICON for special applications.

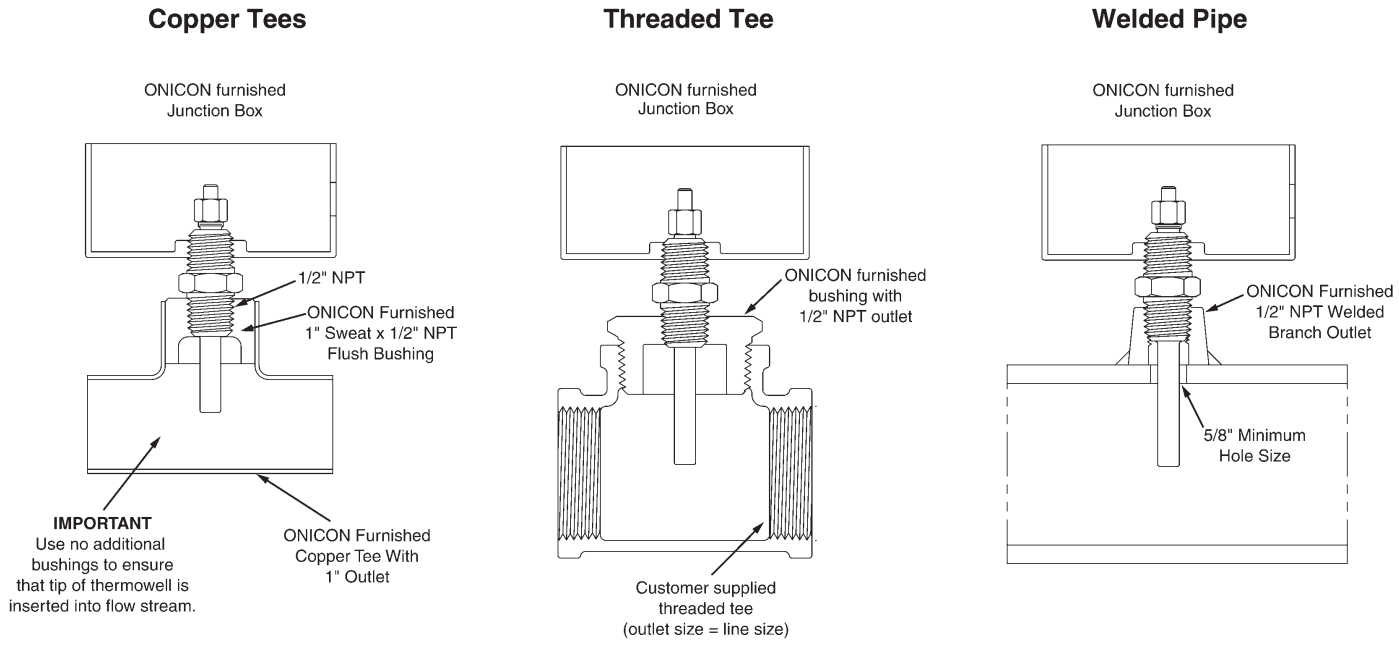

NOTES
1. Thermowell length varies with pipe size.
2. If additional fittings are required, ensure that tip of thermowell is inserted into flow stream.

3.2.2.2 Hot Tap Thermowells

Hot tap thermowells are designed for retrofit applications where it is not practical to isolate and drain the pipe section prior to installation. The thermowell is installed through a 1″ full port ball valve as shown in the drawing on the next page. A hot tap drilling machine equipped with a 7/8″ drill is required to perform this type of installation.

Install the valve assembly as shown in the drawing and then drill the 7/8″ hole using the hot tap drilling machine. Once the valve assembly has been installed and the hole has been drilled, the thermowell can be inserted into the flow stream without a system shutdown.

3.2.2.2 Hot Tap Thermowells (CONTINUED)

WARNING
SYSTEM MAY BE UNDER HIGH PRESSURE. Be sure to hold the conduit box firmly by hand before slowly loosening the position clamping nut when installing, adjusting or removing the thermowell. Failure to do this will allow the pressure to suddenly and rapidly force the thermowell from the pipe, potentially causing serious injury. The thermowell could also be damaged or break apart causing a break in the water seal with the resultant loss of large amounts of water.

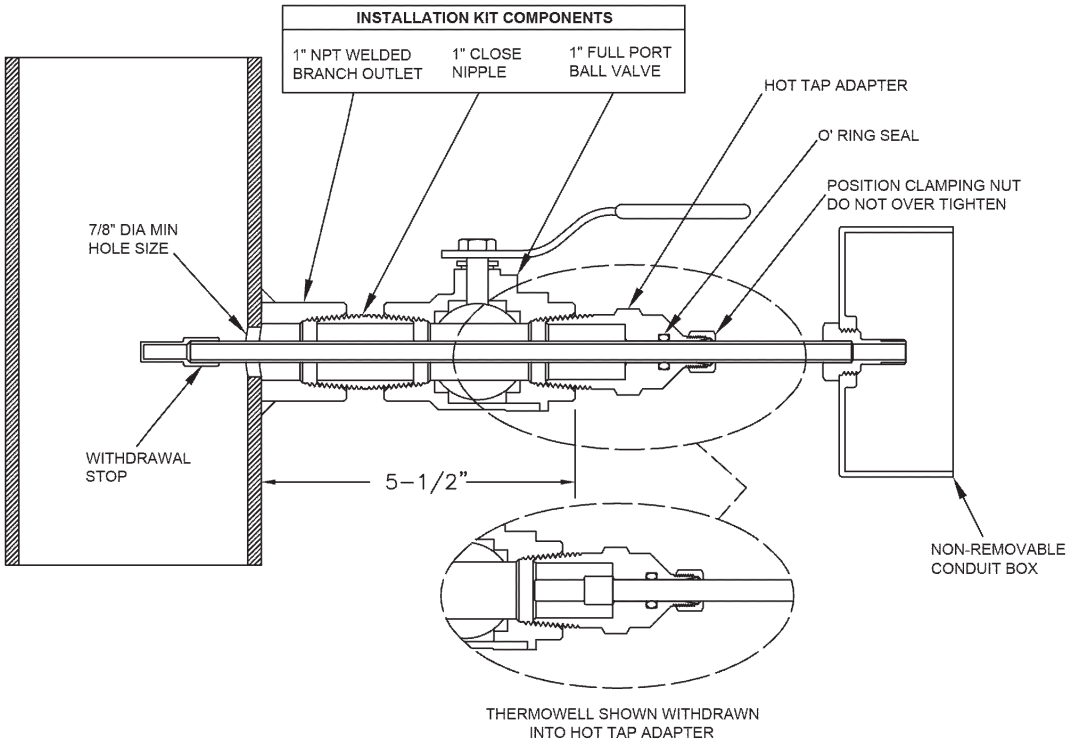

Hot Tap Installation Detail For Thermowell In Welded Pipe

Insertion of the Hot Tap Thermowell

1. Calculate the insertion force (lbs) required by multiplying the system pressure (psig) by 0.11. The person inserting the thermowell should ensure adequate footing for the force required prior to opening the valve.
2. Thread the hot tap adapter into the valve. Firmly grasp the wiring enclosure, loosen the position clamping nut, open the valve, and carefully push the thermowell into the flow stream. Use the attached gage to set the insertion depth.
3. Carefully tighten the position clamping nut that is located at the top of the 1" NPT hot tap adapter fitting. Do not release the wiring enclosure until the position clamping nut has been tightened.

CAUTION
Excessive vibration can damage the thermowell. Insert the thermowell to the proper depth using gauge supplied as shown. Reduce the insertion depth as necessary if strong vibrations are felt during insertion, making certain that the tip of the thermowell remains fully in the flow stream.

CAUTION
DO NOT OVER TIGHTEN THE POSITION CLAMPING NUT. If fluid leaks, do not attempt to correct by tightening this nut further. An internal o-ring seals the fluid. Contact ONICON for assistance in the event of a leak.

Removal Of The Hot Tap Thermowell

WARNING
Maintain a firm hold on the wiring enclosure until the thermowell is completely withdrawn and the valve is closed.

1. System pressure will try to push the thermowell out of the flow stream when the clamping nut is released. Be sure to establish safe footing prior to loosening the clamping nut. The force pushing out against the thermowell is the same as the insertion force calculated above.
2. Grasp the wiring enclosure firmly, holding the thermowell in the pipe and then loosen the position clamping nut. Slowly withdraw the thermowell from the pipe. After the thermowell is completely withdrawn, carefully close the isolation valve.

IMPORTANT NOTE
Rotating the thermowell as you slowly withdraw it through the valve will ensure that the lower tip is fully withdrawn and completely free of the valve. If resistance is felt when closing the valve, open valve fully and rotate the well as you pull it further out of the pipe.

3.2.3 Temperature Sensor Installation

The temperature sensors are factory matched and tagged by serial number to a specific BTU meter. They are also labeled as SUPPLY and RETURN temperature sensors. Please consult ONICON before attempting to use any other temperature sensor.

- Apply a thin coat of thermal compound to the temperature sensor, and gently insert the temperature sensor all the way into the thermowell until it contacts the bottom of the cavity.
- Gently tighten the retainer nut. DO NOT OVER TIGHTEN.
- The thermowell completely seals the plumbing system without the retainer nut. The only purpose for the nut is to keep the sensor from losing contact with the bottom of the thermowell cavity.

IMPORTANT NOTE
Cable length is specified at time of order. Cable provided for temperature sensors is #22 gauge twisted shielded pair. Additional cable may be added in the field if necessary, but must be of twisted shielded pair construction. (#22 gauge minimum and #18 gauge maximum)

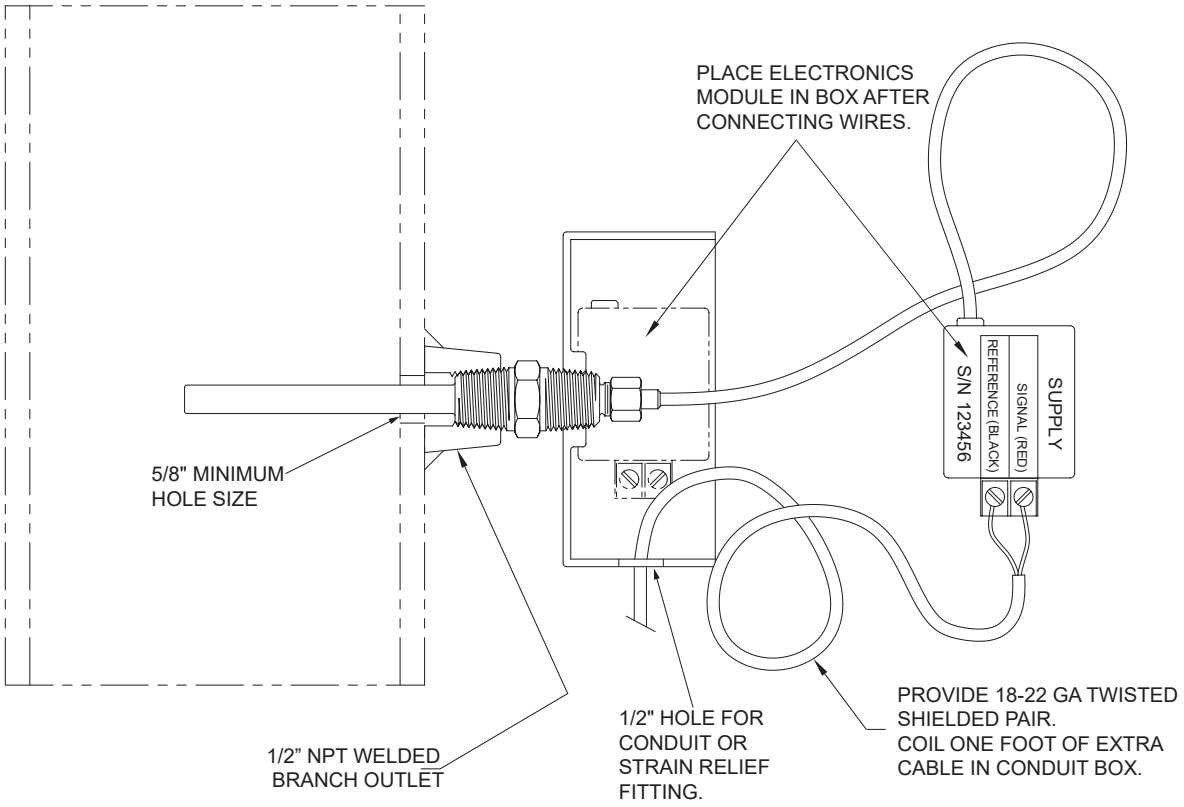

3.2.4 Flow Meter Installation

Determine which pipe (supply or return) has the longer unobstructed straight run. Install the flow meter in the longest straight pipe run available. One temperature sensor can be installed five diameters downstream of the flow meter leaving enough clearance to remove either sensor from the pipe without interference from the other sensor.

Refer to the flow meter IOM and/or other documentation that is provided with your ONICON flow meter.

3.3 ELECTRICAL INSTALLATION

3.3.1 Input Power Requirements

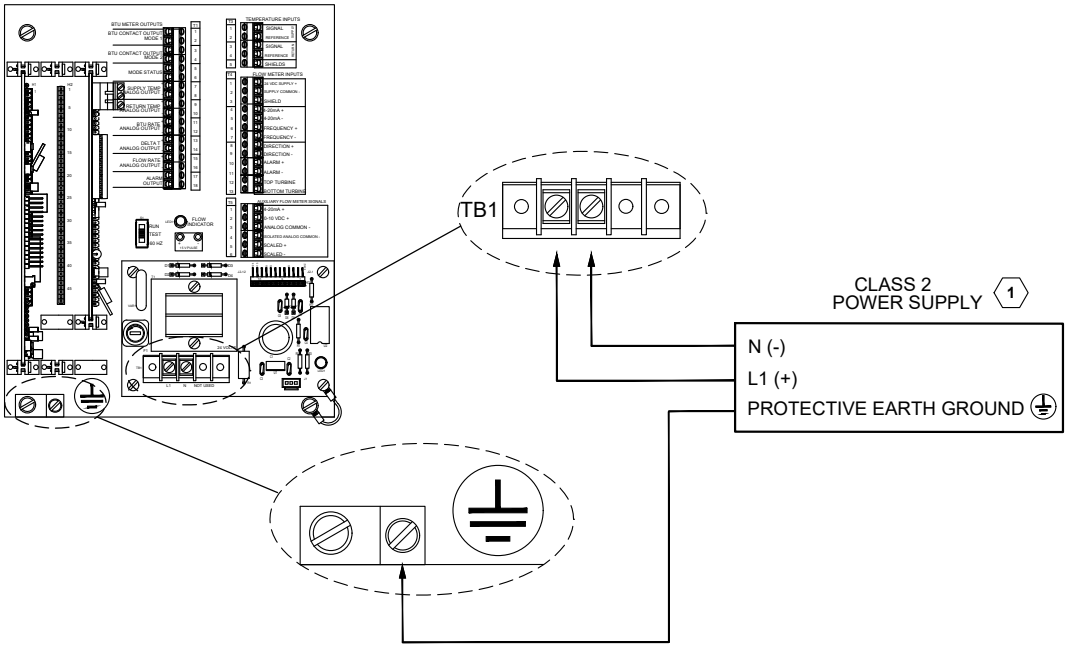

1. Provide a Class 2 power supply with sufficient power for the connected flow meter:
   - 24 VAC: 20 - 28 VAC, 50/60 Hz, 12 VA
   - 120 VAC: 108 - 132 VAC, 50/60 Hz, 15 VA
   - 240 VAC: 207 - 253 VAC, 50/60 Hz, 15 VA

IMPORTANT NOTE:
This option is not field selectable. Contact ONICON if needed to change the input voltage rating.

WARNING
Conduit openings in the System-10 enclosure must be closed with UL listed fittings applicable to NEMA 13 enclosures.

WARNING
Disconnect main power before proceeding.

Connect the power source to the main unit through the conduit opening located on the bottom of the main unit. DO NOT drill holes in the enclosure. Fasten the power wires to the appropriate screw terminals as shown. Do not exceed 12 in-lb (1.4 Nm) of torque when tightening.

Connect the protective earth wire to the lug located in the lower left hand corner of the motherboard.

CAUTION
This product must be connected to earth ground for proper operation. Failure to do so may result in erratic operation.

As power is initially applied to the System-10, immediately confirm that the display is illuminated and scrolling through the character diagnostic test. The test will begin by indicating the letter P in every position followed by a countdown from 9 to 0 for each digit, If this does not occur, disconnect power immediately and re-verify all wiring connections. If the problem persists, contact ONICON.

3.3.2 Input Signal Connections

Make connections on the mother board, located in the enclosure, at terminal strips T3, T4 and T5. Do not exceed 4.5 in-lb (0.5 Nm) of torque when tightening.

3.3.2.1 Input Signal Connections from Temperature Sensors

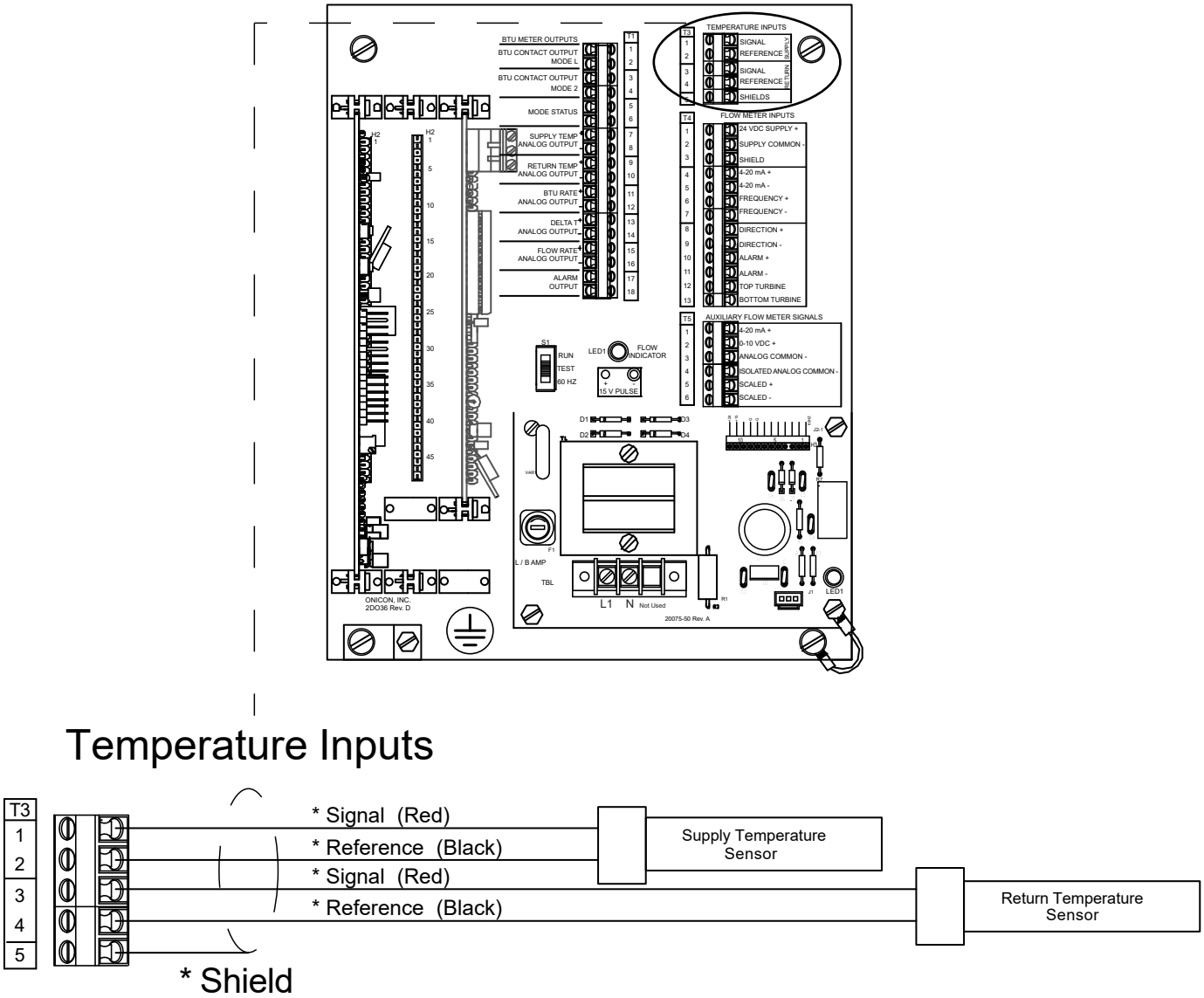

CAUTION

Shield connections are required for proper operation. Failure to use shielded cable may result in erratic operation.

3.3.2.2 Input Signal Connections From F-1000 Series Flow Meters

ONICON turbine flow meters are provided with a number of different output configurations. These affect the number of wires contained in the cable attached to the flow meter. Refer to the diagram below and the laminated tag attached to the flow meter for specific details.

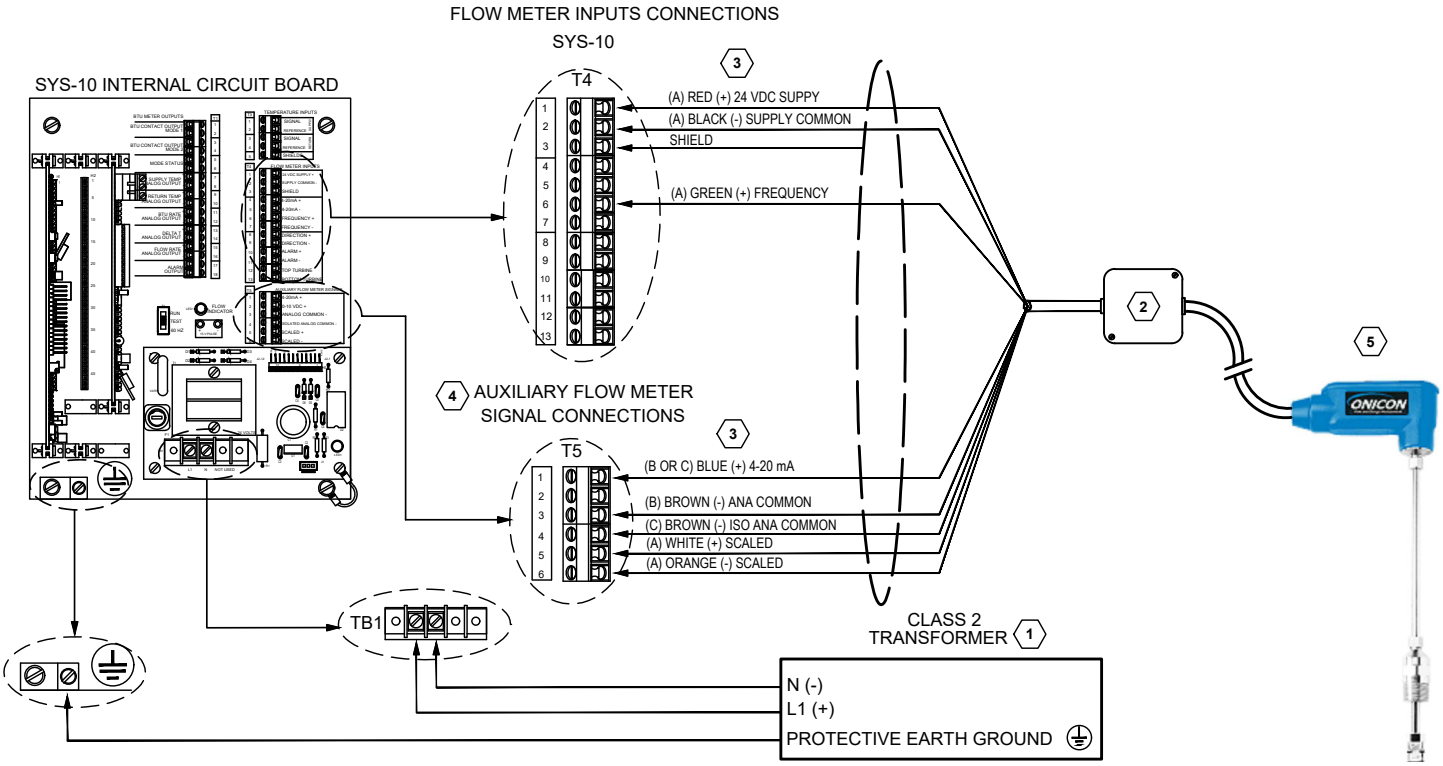

1. Provide a Class 2 power supply with sufficient power for the connected flow meter:
   - 24 VAC: 20-28 VAC, 50/60 Hz, 12 VA *(22 VAC minimum for versions with IP COMMS + 4 channel analog card)*
   - 120 VAC: 108-132 VAC, 50/60 Hz, 15 VA *(112 VAC minimum for versions with IP COMMS + 4 channel analog card)*
   - 240 VAC: 207-253 VAC, 50/60 Hz, 15 VA *(220 VAC minimum for versions with IP COMMS + 4 channel analog card)*
2. Connect factory wires to field wires in appropriate junction box. Do not remove factory wires.
3. Connections shown with (A) are required for all models.
   Connections shown with (B) are used with F-1XXX-10 models.
   Connections shown with (C) are used with F-1XXX-11 models.

   Factory wire colors are shown from flow meter cable or additional cable provided by ONICON, field wire colors may change from junction box.
4. Auxiliary flow meter connections are not used by the BTU meter. Both incoming and outgoing connections are made to the same terminal.
5. Refer to F-1000 Series IOM for additional wiring information.

3.3.2.3 Input Signal Connections From F-2000 Series (Loop Powered Versions) Flow Meters

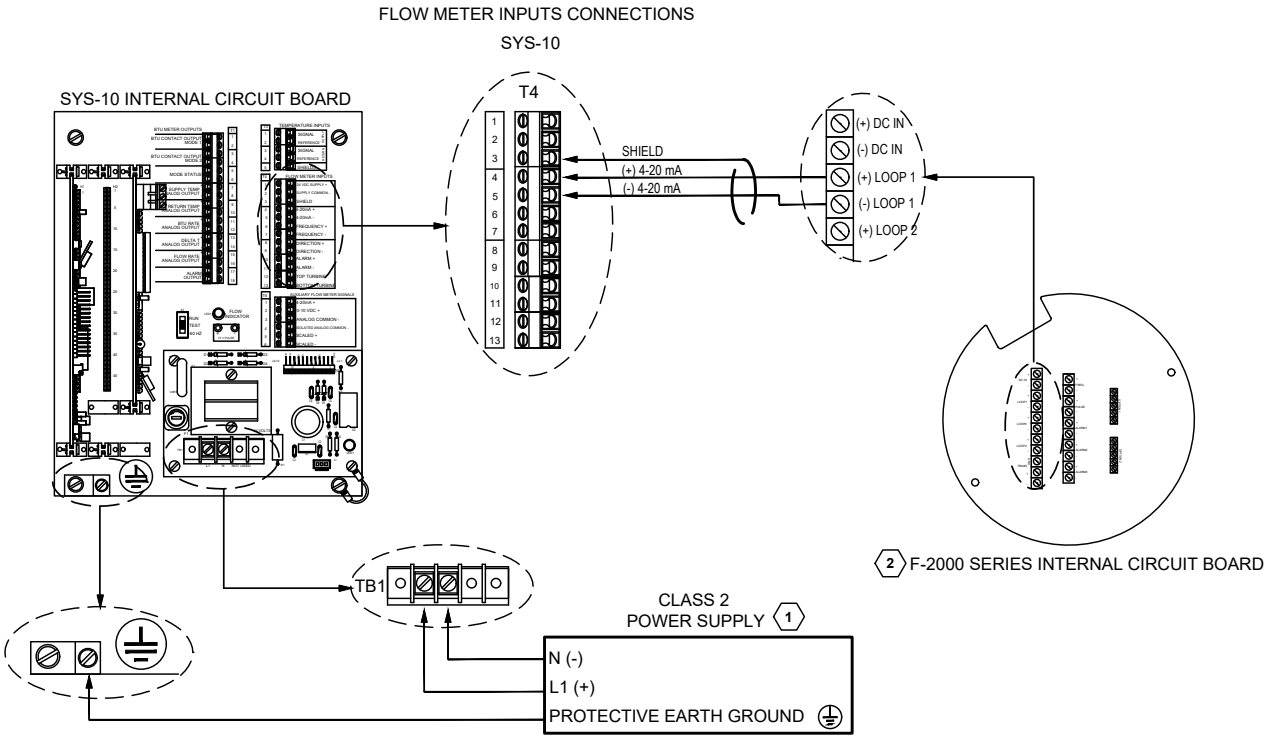

1. Class 2 power supply requirement (input voltage is not field selectable):
   - 24 VAC: 20-28 VAC, 50/60 Hz, 12 VA
   - 120 VAC: 108-132 VAC, 50/60 Hz, 15 VA
   - 240 VAC: 207-253 VAC, 50/60 Hz, 15 VA
2. Refer to F-2000 series IOM for additional wiring information.

3.3.2.4 Input Signal Connections from FT-3100/3200 Series Flow Meters

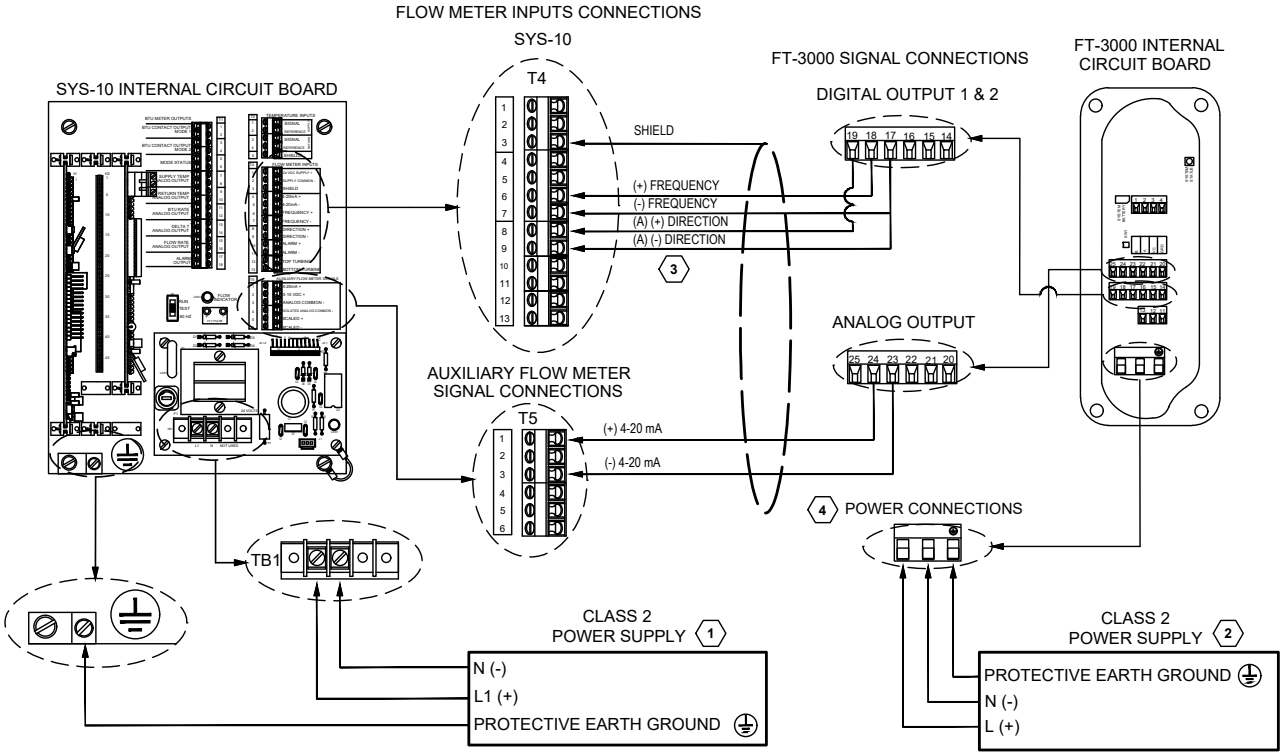

1. Class 2 power supply requirement (input voltage is not field selectable):
   - 24 VAC: 20-28 VAC, 50/60 Hz, 12 VA
   - 120 VAC: 108-132 VAC, 50/60 Hz, 15 VA
   - 240 VAC: 207-253 VAC, 50/60 Hz, 15 VA
2. The System-10 does not provide power to the FT-3100/3200 Series flow meters. Input power for the flow meters must be provided separately. Refer to FT-3100/3200 Series IOM for additional wiring information.

   For 24 VAC version, it is acceptable to power the FT-3100/3200 Series flow meter from the System-10 mains terminals (TB1).
   - 24 VAC: 20-28 VAC, 50/60 Hz, 19 VA
3. Connections shown with (A) are used with bi-directional models only.
4. FT-3100/3200 Series input power is not field selectable. Please confirm the flow meter input voltage type. Contact the factory if you need to change the input voltage rating.

3.3.2.5 Input Signal Connections from FT-3400 Flow Meters

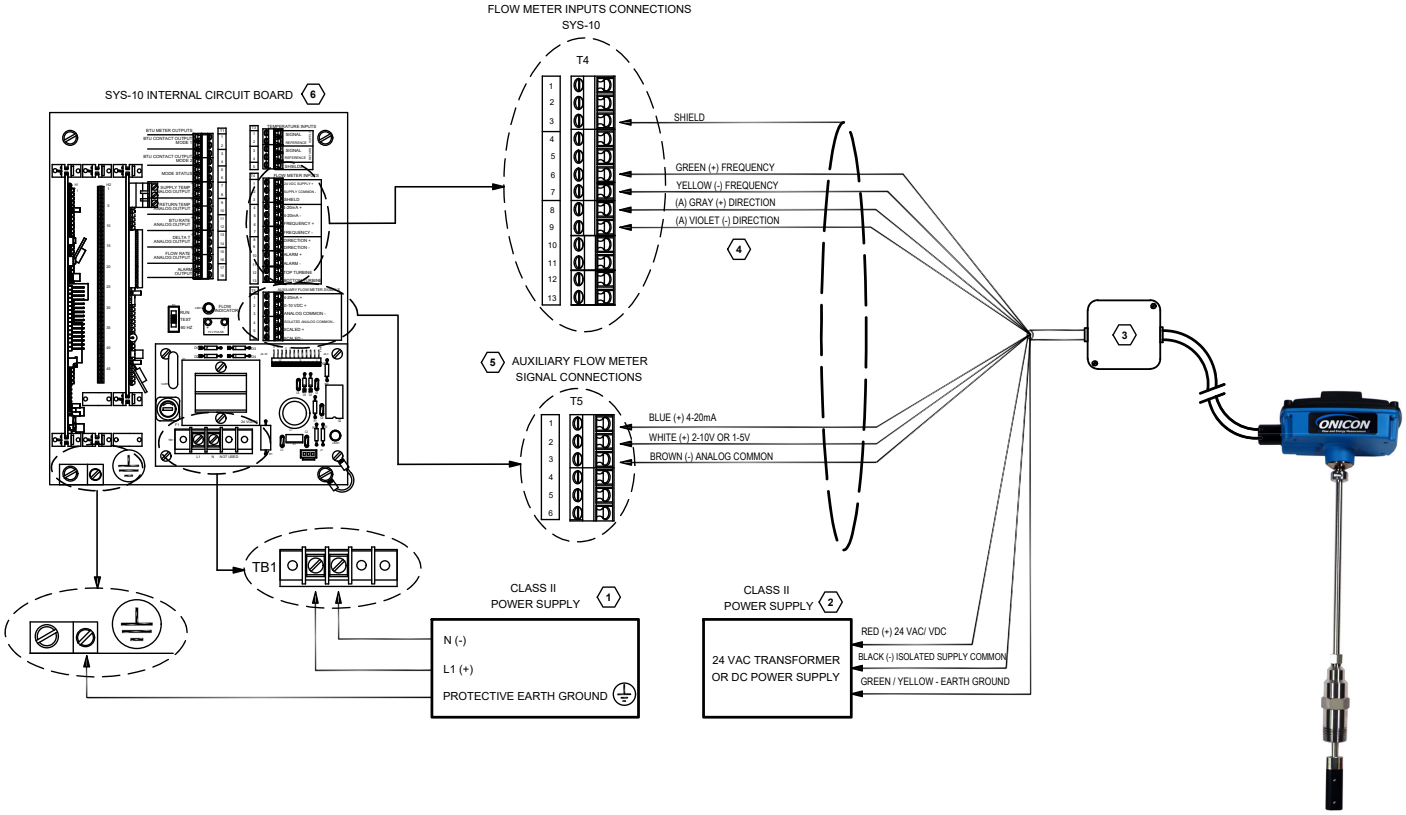

1. Power Supply (Class 2 Power Supply for 24 VAC) Requirement (Input voltage is not field selectable):
   - 24 VAC: 20-28 VAC, 50/60 Hz, 12 VA
   - 120 VAC: 108-132 VAC, 50/60 Hz, 15 VA (112 VAC minimum for versions with IP COMMS + 4 Channel Analog Card)
   - 240 VAC: 207-253 VAC, 50/60 Hz, 15 VA (220 VAC minimum for versions with IP COMMS + 4 Channel Analog Card)
2. The System-10 does not provide power to the FT-3400 Flow Meters. Input power for the flow meters must be provided separately. Refer to FT-3400 IOM for additional wiring information.
   For 24 VAC version, it is acceptable to power the FT-3400 Flow Meters from the SYS-10 Mains Terminals (TB1).
   - 24 VAC: 20-28 VAC, 50/60 Hz, 30 VA to power both FT-3400 and SYS-10
3. Connect FT-3400 factory wires to field wires in appropriate junction box. Do not remove factory wires.
4. Connections shown with (A) are used with bi-directional (FT-3400-2) models only.
   Factory wire colors are shown from flow meter cable or additional cable provided by ONICON. Field wire colors may change from junction box.
5. Auxiliary flow meter connections are not used by the BTU meter. Both incoming and outgoing connections are made to the same terminal.
6. Refer to SYS-10 IOM for additional wiring information.

3.3.2.6 Input Signal Connections from FSM-3 Series Flow Meters

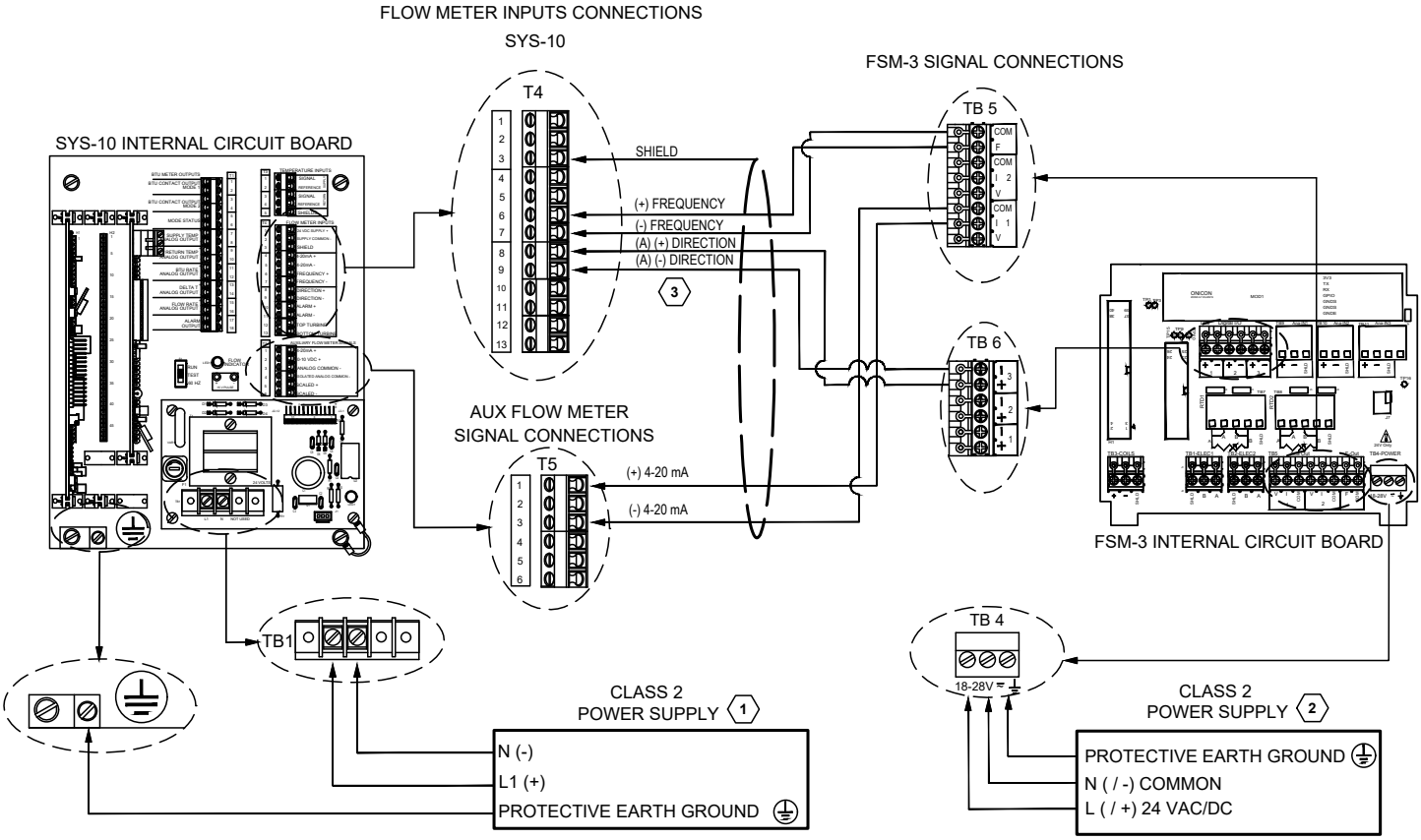

1. Class 2 power supply requirement (input voltage is not field selectable):
   - 24 VAC: 20-28 VAC, 50/60 Hz, 12 VA
   - 120 VAC: 108-132 VAC, 50/60 Hz, 15 VA
   - 240 VAC: 207-253 VAC, 50/60 Hz, 15 VA
2. The System-10 does not provide power to the FSM-3 Series flow meters. Input power for the flow meters must be provided separately. Refer to FSM-3 Series IOM for additional wiring information .

   For 24 VAC version, it is acceptable to power the FSM-3 Series flow meters from the System-10 mains terminals (TB1).
   - 24 VAC: 20-28 VAC, 50/60 Hz, 52 VA
3. Connections shown with (A) are used with bi-directional models only.

3.3.2.7 Input Signal Connections from F-4300 Flow Meters

WARNING
Turn off mains power at the source prior to making power connections to the F-4300. Contact with exposed live wiring may result in electric shock, burns and/or serious injury.

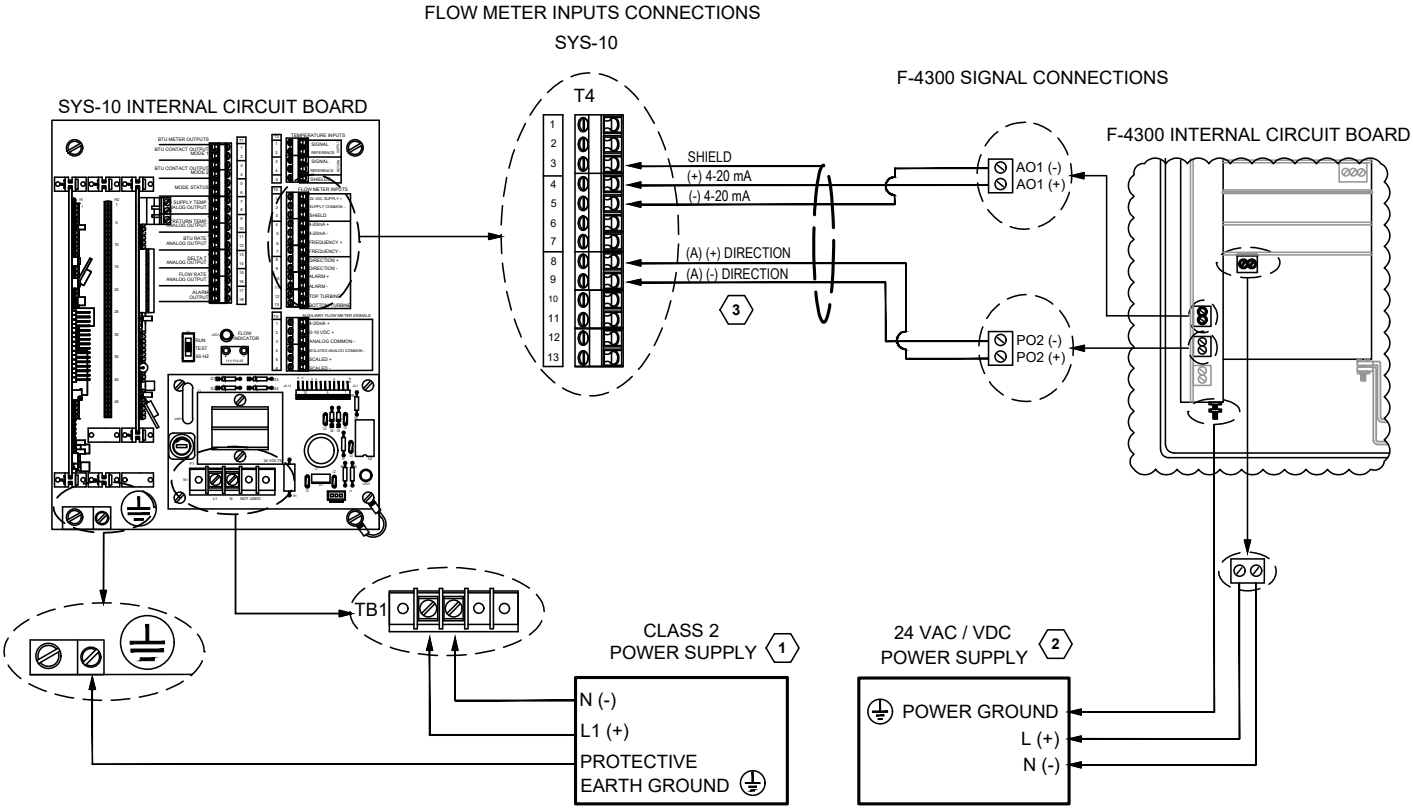

1. Class 2 power supply requirement (input voltage is not field selectable):
   - 24 VAC: 20-28 VAC, 50/60 Hz, 12 VA
   - 120 VAC: 108-132 VAC, 50/60 Hz, 15 VA
   - 240 VAC: 207-253 VAC, 50/60 Hz, 15 VA
2. The System-10 does not provide power to the F-4300 flow meters. Input power for the flow meters must be provided separately. Refer to F-4300 IOM for additional wiring information.

   For 24 VAC version, it is acceptable to power the F-4300 flow meters from the System-10 mains terminals (TB1).
   - 24 VAC: 20-28 VAC, 50/60 Hz, 18 VA
3. Connections shown with (A) are used with bi-directional models only.

CAUTION
Shield and earth connections are required for proper operation. Failure to use shielded cable or to connect earth to both the flow meter and System-10 may result in erratic operation. Shields should be terminated at the System-10 shield terminals and left unterminated at the flow meter.

3.3.2.8 Input Signal Connections From FT-4600 Flow Meters

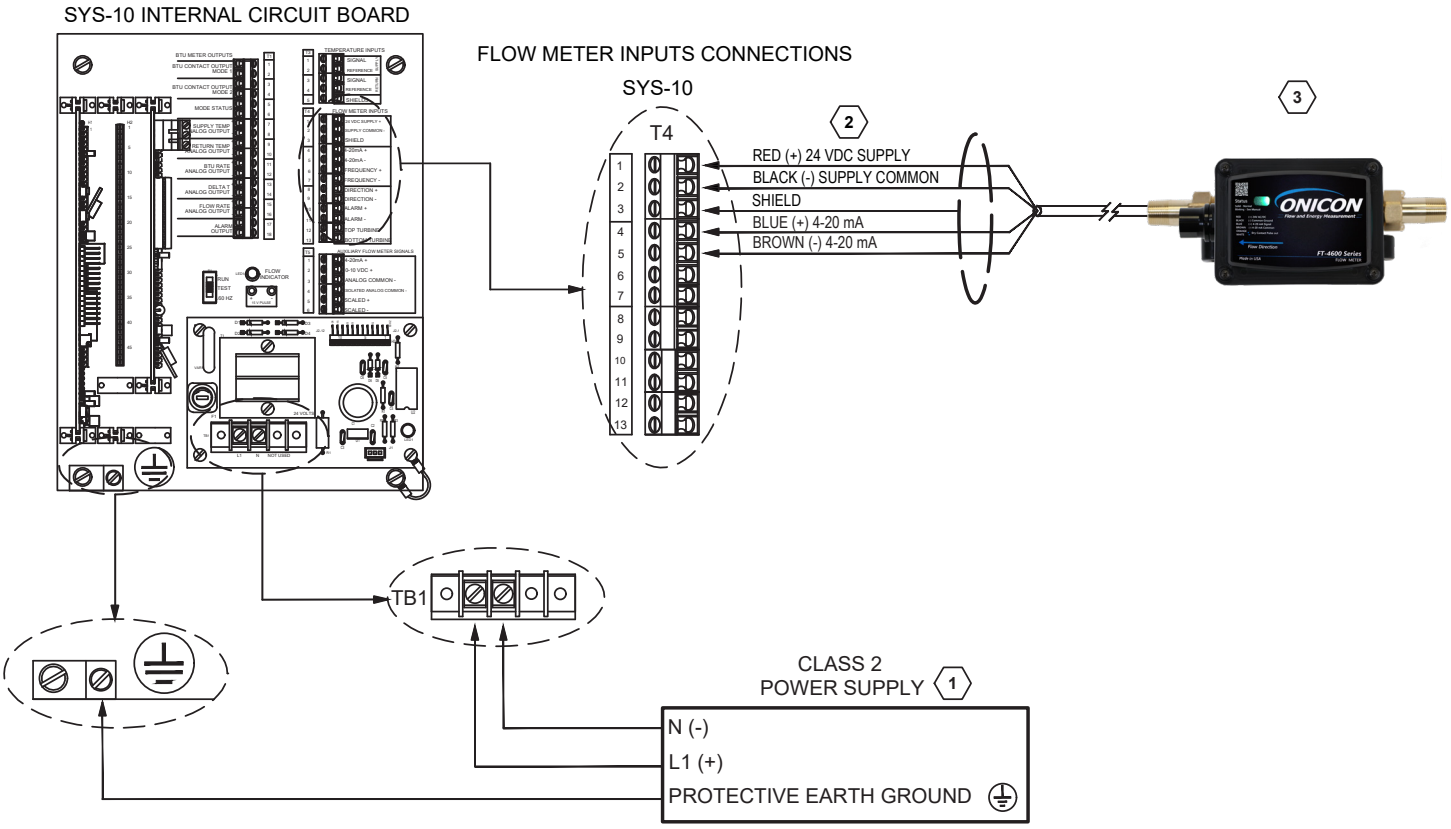

1. Class 2 power supply requirement (input voltage is not field selectable):
   - 24 VAC: 20-28 VAC, 50/60 Hz, 12 VA
   - 120 VAC: 108-132 VAC, 50/60 Hz, 15 VA
   - 240 VAC: 207-253 VAC, 50/60 Hz, 15 VA
2. Factory FT-4600 wire colors are identified from the flow meter. Do not remove factory cable.
3. Refer to FT-4600 Series IOM for additional wiring information.

3.3.2.9 Input Signal Connections From F-4600 (LCD Display Versions) Flow Meters

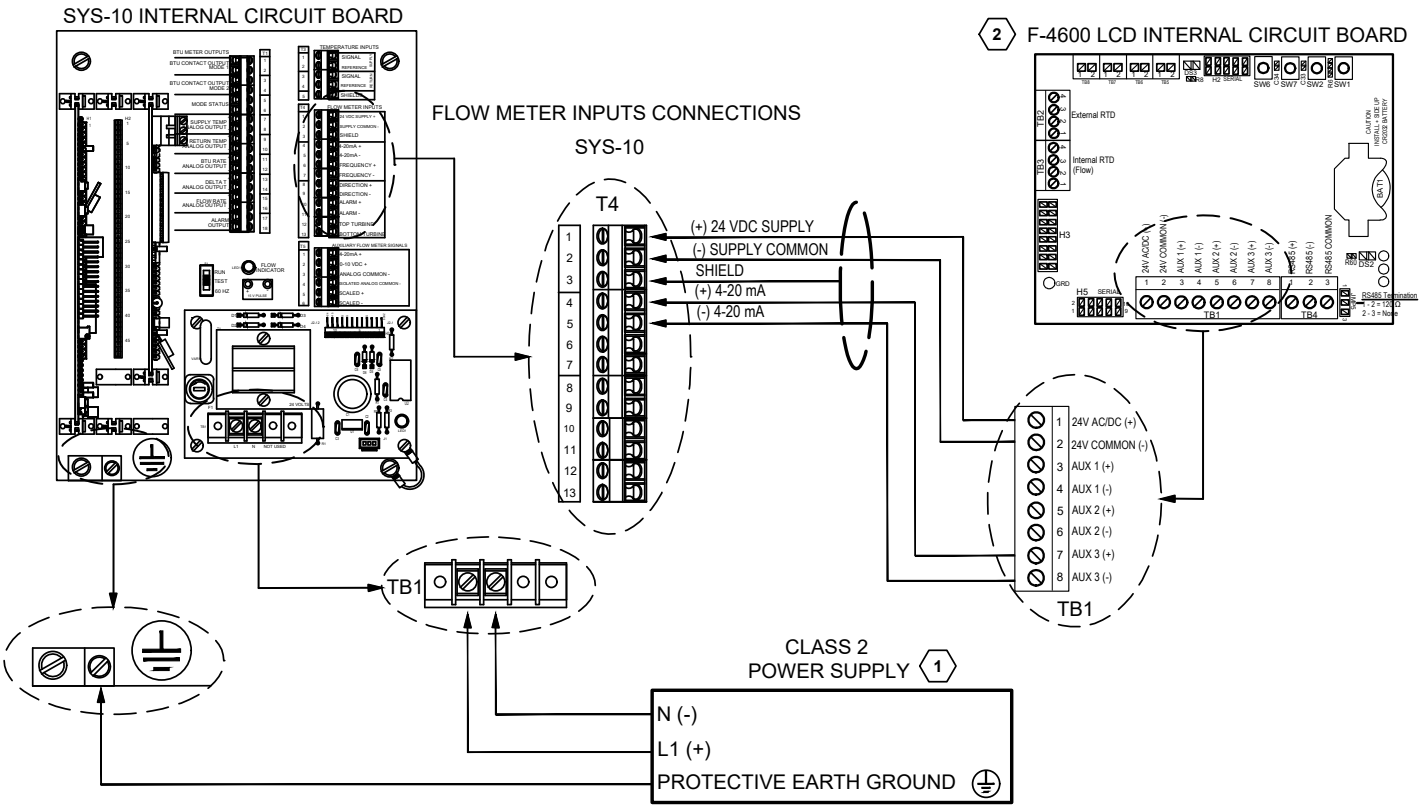

1. Class 2 power supply requirement (input voltage is not field selectable):
   - 24 VAC: 20-28 VAC, 50/60 Hz, 12 VA
   - 120 VAC: 108-132 VAC, 50/60 Hz, 15 VA
   - 240 VAC: 207-253 VAC, 50/60 Hz, 15 VA
2. Refer to F-4600 LCD Series IOM for additional wiring information.

3.3.3 Contact Closure Input For Flow Direction

The System-10 is provided with a separate input for determining flow direction. Connections for this input are made at T4 terminals 8 (+) and 9 (-). This input can be connected to a non-polarized contact closure relay or an open connector output. Note that the input is polarized for sinking (NPN) open collector outputs. Totals will accumulate in the mode 1 registers whenever the contacts are closed.

3.3.4 Contact Closure Output For Energy Total(s) And Mode Status

For single mode applications (heating or cooling), the output relay for energy total is located on the mother board at T1, pins 1 and 2. The value of each "closure" is listed on the certificate of calibration and is the same as the energy total multiplier displayed on the LCD (example: each closure = 10,000 BTU's).

For dual mode applications (two-pipe heat/cool), the energy total for the heating mode (where supply temp is greater than return temp) is provided at T1, pins 1 and 2. The energy total in the cooling mode is provided at T1, pins 3 and 4. Mode status is at T1, pins 5 and 6 (open contact = mode 1 operation).

For bi-directional applications, the table below describes the relationship between mode 1 and mode 2 totals and forward and reverse flow for ONICON insertion turbine and inline electromagnetic flow meters.

Do not exceed 4.5 in-lb (0.5 Nm) of torque when tightening the terminals.

FLOW METER MODEL	FLOW DIRECTION RELATIVE TO DIRECTION ARROW ON METER	FLOW METER OUTPUT CONDITION	System-10 MODE STATUS INDICATOR (T1 - PINS 5 & 6)	System-10 REGISTER ACCUMULATING TOTALS
FT-3400 (Bi-directional version)	Flow in the direction of arrow	Closed contact	Open contact	Mode 1
	Flow reverse from direction arrow	Open contact	Closed contact	Mode 2
FT-3100/3200 Series Inline Flow Meter	Flow toward (+) sign	Not energized (open)	Closed contact	Mode 2
	Flow toward (-) sign	Energized (closed)	Open contact	Mode 1

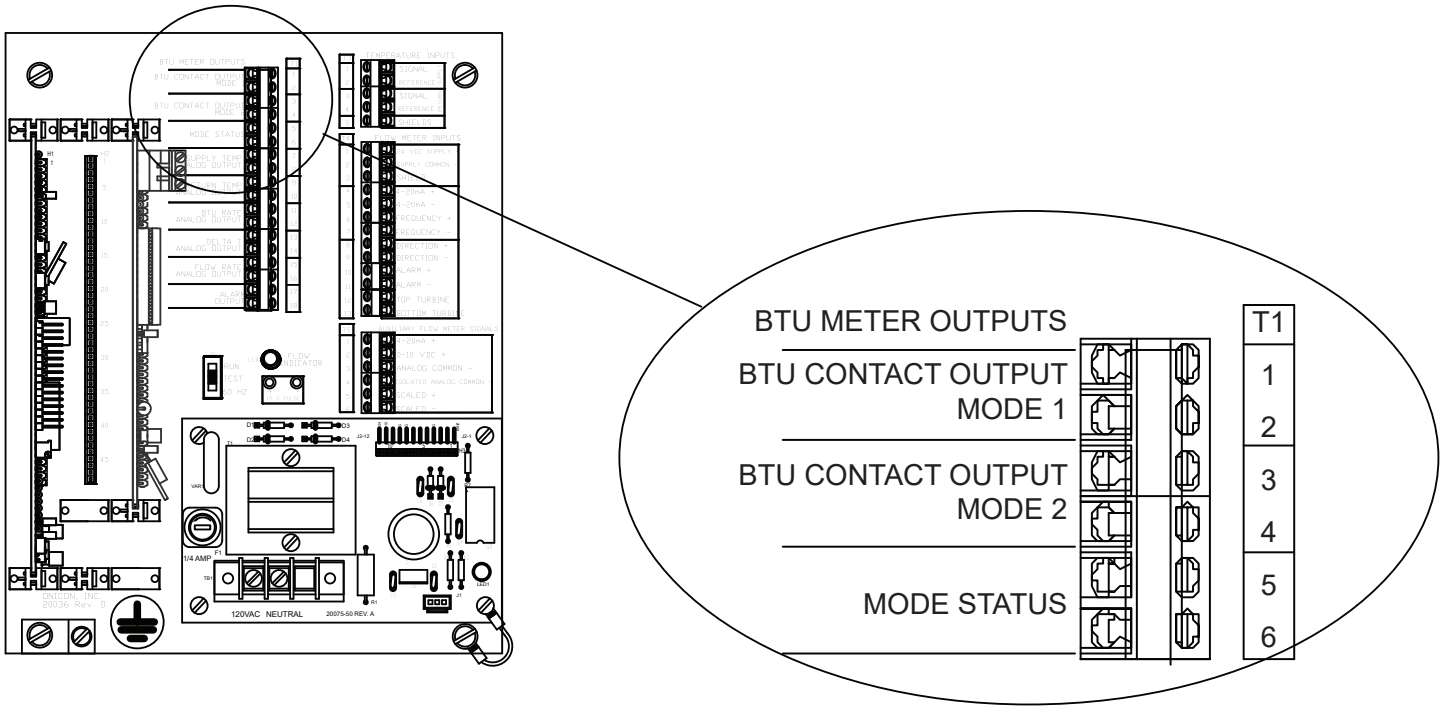

3.3.5 Optional Isolated Analog Output(s)

The System-10 can be configured to provide up to four (4) isolated analog outputs of the following five parameters: supply temperature, return temperature, flow rate, energy rate and delta temperature.
The output type, 4-20 mA, 0-10 VDC or 5 VDC is field configurable. The selected outputs and associated scaling are configured at the factory. See the certificate of calibration or label located on the inside cover for analog output configuration information.

Please note: If System-10 is ordered with a flow meter capable of producing an analog output, the output signal will be available at terminal T5.

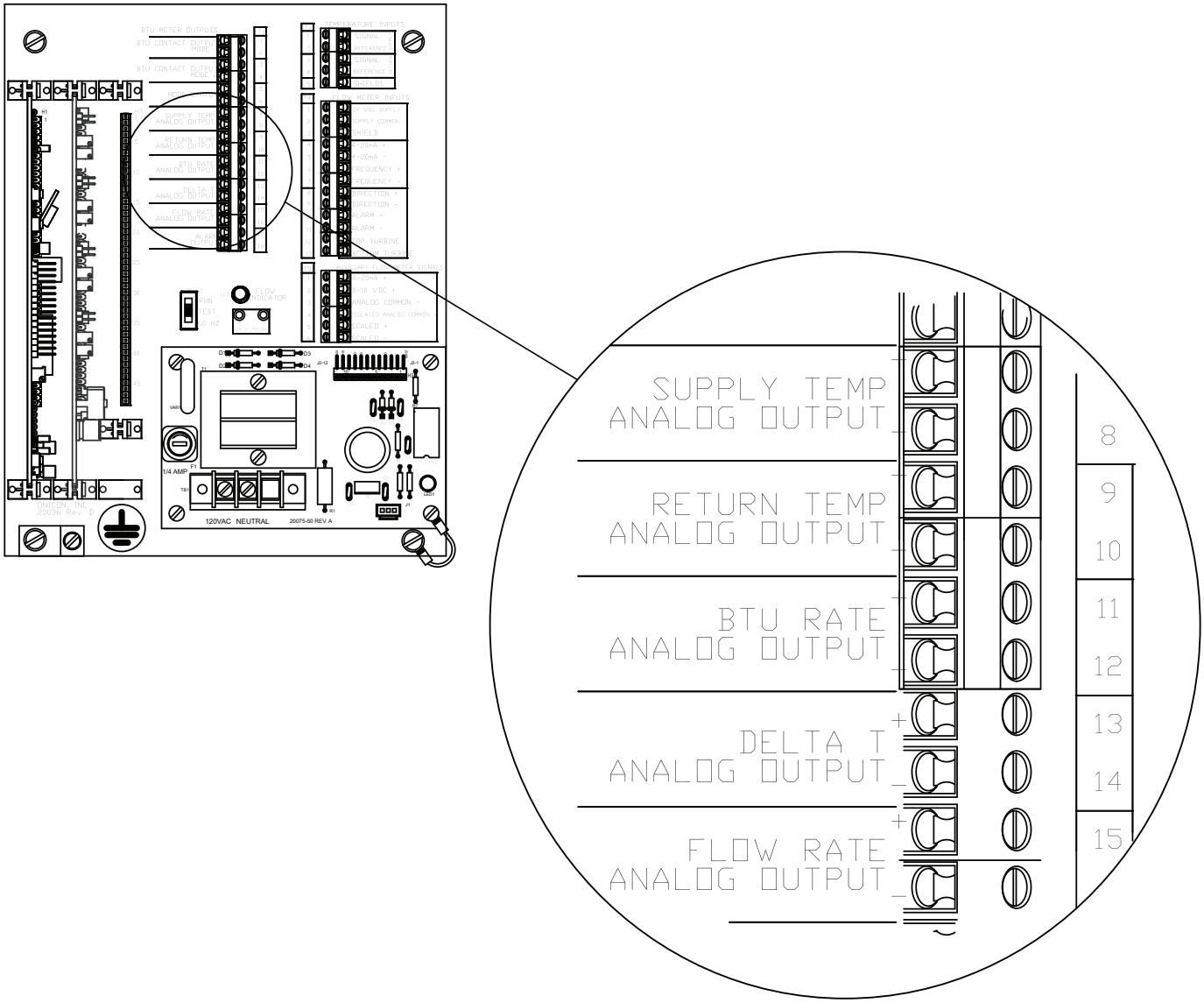

CAUTION
Analog outputs are all configured as active outputs. Do not apply power to any of the 4-20 mA, 0-10 or 0-5 volt outputs. Doing so will damage the output.

SECTION 4.0 START-UP AND COMMISSIONING

4.1 DISPLAY AND USER INTERFACE

The display contains two lines of alphanumeric characters. The first line displays the current value. The second line contains the engineering units and a multiplier which can range from 1 to 1,000,000. The multiplier is the value the number on the top line must be multiplied by to achieve the correct value.

Three (3) button user interface is provided to operate the display and program the meter.

When operating in the run mode, the SCROLL button advances the display from one page to the next. A total of up to 11 different pages may be available for display depending whether the meter is operating in the single or dual mode.

The RESET button (if enabled) allows totals to be reset to zero. The PROGRAM button is not active when operating in the run mode.

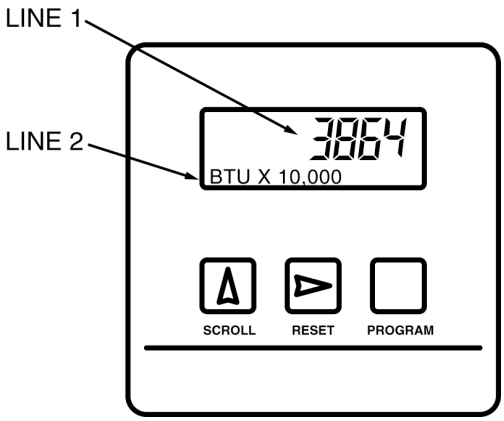

4.2 PROCESSOR START-UP

When power is applied to the BTU meter alphanumeric characters appear on the two lines of the display indicating the meter is operating. Press and release the SCROLL button on the front panel. Observe the display cycle to the next display page.

Select the SUPPLY TEMP Page. Note the displayed temperature. Confirm that it is in the expected range. Now select the RETURN TEMP page. Again note the displayed temperature. Confirm that it is also in the correct range.

Select the FLOW RATE page. Note the displayed flow rate. Confirm that the flow rate value is in the correct range.

Successively pressing the SCROLL button will cycle the display through the run mode pages summarized in the tables on the next page.

To finalize the installation, follow the procedure outlined in section 4.5 to identify and designate the flow meter location.

4.2 PROCESSOR START-UP (CONTINUED)

SINGLE MODE OPERATION

PAGE NUMBER	DISPLAY NAME	SELECTABLE UNITS
1	ENERGY TOTAL	BTU, TONHR or KWHR
2	FLOW TOTAL	GAL, LITER, METERS^3
3	ENERGY RATE	BTU/HR, TONS, KW
4	FLOW RATE	GPM, GPH, MGD, L/SEC, L/MIN, L/HR, METERS^3/HR
5	SUPPLY TEMPERATURE	DEG F, DEG C
6	RETURN TEMPERATURE	DEG F, DEG C
7*	Di3 PULSE TOTAL	COUNTS or TEXT ENTRY
8	ALARM STATUS	NOT APPLICABLE
9	SERIAL NUMBER	NOT APPLICABLE

DUAL MODE OR BI-DIRECTIONAL MODE OPERATION

PAGE NUMBER	DISPLAY NAME	SELECTABLE UNITS
1	MODE 1 ENERGY TOTAL	BTU, TONHR or KWHR
2	MODE 1 FLOW TOTAL	GAL, LITER,METERS^3
3	MODE 2 ENERGY TOTAL	BTU, TONHR or KWHR
4	MODE 2 FLOW TOTAL	GAL, LITER, METERS^3
5	ENERGY RATE	BTU/HR, TONS, KW
6	FLOW RATE	GPM, GPH, MGD, L/SEC, L/MIN, L/HR, METERS^3/HR
7	SUPPLY TEMPERATURE	DEG F, DEG C
8	RETURN TEMPERATURE	DEG F, DEG C
9*	Di3 PULSE TOTAL	COUNTS or TEXT ENTRY
10	ALARM STATUS	NOT APPLICABLE
11	SERIAL NUMBER	NOT APPLICABLE

*** Menu page only displayed when optional digital input is present.**

4.3 UNITS AND MULTIPLIERS

The units and multipliers are programmed prior to delivery. Contact ONICON for assistance in changing units or multipliers.

4.4 ANALOG OUTPUTS

The System-10 BTU Meter is capable of providing up to four analog outputs (optional). Analog outputs are programmed at the factory in terms of units and scaling. Changing any of the displayed units or multipliers will affect the analog outputs. If any unit or multiplier values are changed at the System-10 BTU Meter, the analog output value(s) will also be changed. If you are unsure of the ramifications of any changes you are contemplating, please contact ONICON for assistance.

4.5 SELECTING THE FLOW METER LOCATION & ENABLING/DISABLING FRONT PANEL RESET

Before the System-10 is commissioned, the flow meter location should be programmed into the meter. This is particularly important for systems that will operate with delta temperatures ≥20 °F. The default setting for the flow meter location is unknown. It should be changed to the location setting that corresponds to the flow meter's physical location in the piping system. Choose supply when the flow meter is located in the pipe leading to the inlet to the heat exchanger and return when the flow meter is located in the pipe leaving the outlet of the heat exchanger. Leave the setting at unknown for bi-directional flow applications.

The table below explains how to designate the flow meter location and how to enable or disable the front panel reset.

STEP	ACTION	REACTION	COMMENT
1	With the BTU meter running, open the front panel and locate DEV ADD/PROG ENAB. Press DEV ADD/PROG ENAB and then release it.	None.	DEV ADD/PROG ENAB is located in the lower left corner of the BTU computer board. (see appendix page A-14.)
2	Close the front panel.		
3	Press the PROGRAM button. (If you do not press the PROGRAM button, the meter will revert to the run mode after 5 minutes.)	The BTU meter changes to program mode and the DEVICE ID page will appear with the first digit of the address flashing.	The PROGRAM button is on the front panel.
4	Press the PROGRAM button.	The FM LOCN page appears with UNKNWN defaulted as the current location.	The PROGRAM button is on the front panel.
5	Press the SCROLL button.	The setting will toggle between UNKNWN, SUPPLY, and RETURN.	Choose the FM LOCN as necessary.
6	Press the PROGRAM button.	The FRONT PANEL RESET page appears with the N or Y flashing.	The PROGRAM button is on the front panel.
7	Press the SCROLL button.	The setting will toggle between N and Y.	Enable or disable the FRONT PANEL RESET as necessary.
8	Press the PROGRAM button.	The SAVE CHANGES page appears with the N flashing.	The new FRONT PANEL RESET setting must be saved to take effect.
9	Press the SCROLL button.	The N changes to Y.	The Y must be selected for the new address to take effect.
10	Press the PROGRAM button.	The new setting is saved and the display reverts to the run mode.	The PROGRAM button is on the front panel.

4.6 COMMISSIONING

Upon initial installation, it is strongly recommended that both the System-10 and its associated flow meter be commissioned to ensure that they are properly installed and functioning correctly. This process involves verifying the mechanical installation, measuring flow and temperature signals and then comparing these measurements to the specified installation and operating parameters listed on the certificate of calibration provided with the meter. The data collected during this initial commissioning process will then serve as baseline data for periodic revalidation of the meter operation.

4.6.1 Commissioning Procedure

Please read the entire procedure carefully before proceeding. Wiring instructions are located on page 20-27. A worksheet for checking off the following steps and recording measured values is located on page 35.

1.	Confirm flow meter location and adequate straight pipe run to achieve desired results. Confirm that the flow meter location is identified and selected as per section 4.5 of this manual.	Is the flow meter located in the correct location as required by the plans? Compare actual straight pipe upstream and downstream of the flow meter location to the recommended distances identified in the flow meter installation manual. Note: The flow meter manual is very conservative, assuming worst-case pipe obstructions. Contact ONICON to discuss specifics of your application. If straight pipe run is very short, consult ONICON PRIOR to installing the flow meter to discuss the possibility of upgrading to a different flow meter. Review and record the flow meter location program setting.
2.	Confirm pipe size & material.	Confirm that the flow meter is tagged for the pipe diameter and material it is installed in and that this information corresponds to the information listed on the BTU meter certificate of calibration. When in doubt, measure the circumference of the pipe. Pipe O.D. = (circumference / 3.14) – (insulation thickness x 2)
3.	Confirm insertion depth and orientation (for insertion meters only).	Each insertion type flow meter comes with an attached insertion gage and instruction tag. Ensure that meter is inserted to correct depth and that the electronics enclosure is parallel with the pipe, with the arrow in the direction of flow.
4.	Confirm temperature sensor thermowell installations.	Confirm that the thermowells are properly installed and the bottom of the well is in the flow stream. Make certain that only the components supplied with the installation kit were used and that additional bushings were not added.
5.	Confirm temperature sensor installations.	Confirm that the temperature sensors are properly installed, and each sensor is bottomed out in the well. A small amount of thermal compound should be applied to the tip of each sensor to improve the thermal transfer. Each sensor has a black sleeve on the cable coming up from the metal sensor. This sleeve in cut to length for the thermowell. When the sensor is fully bottomed out in the well, the retaining nut can be tightened without any of the black sleeve protruding through the nut.
6.	Confirm connection to correct ONICON BTU meter.	Confirm that the flow meter serial number matches the BTU meter serial number (when ordered together). Also confirm that the serial numbers of the temperature sensors match the BTU and flow meters.
7.	Verify the type of fluid used in the piping system.	Confirm that the fluid specified on the BTU meter certificate of calibration matches the fluid flowing in the piping system.

4.6.1 Commissioning Procedure (continued)

8.	Confirm correct supply voltage.	Verify that correct AC voltage is available at the power supply input terminals. System-10 BTU Meters are configured to operate from 24, 120 or 240 VAC input voltage (not field selectable). Input voltages should be within the following ranges: 24 VAC: 20 - 28 VAC, 50/60 Hz, 12VA 120 VAC: 108 - 132 VAC, 50/60 Hz, 15 VA 240 VAC: 207 - 253 VAC, 50/60 Hz, 15 VA
9.	Verify flow meter and temp sensor wiring	Verify that the flow meter and temperature sensors are properly connected to the BTU meter. Consult the wiring diagram for your specific flow meter in the System-10 Installation Manual.
10.	Verify that the flow test switch is in the RUN position.	Confirm that the flow test switch is in the correct position. The flow test switch is located in the middle of the motherboard immediately above the power supply board. The switch must be set to RUN for normal operation.
In order to proceed with the following steps, the BTU meter must be operating and connected to the network. There must also be flow in pipes. Flow signal readings should be taken while holding the flow rate constant if possible. Otherwise, take the various output readings as quickly as possible.		
11.	Select the SUPPLY TEMP page. Note and record the temperature.	Scroll through the BTU meter display pages and select the SUPPLY TEMP page. Note the displayed temperature and confirm that it is close to the design supply temperature specified on the BTU meter certificate of calibration. Record the temperature.
12.	Select the RETURN TEMP page. Note and record the temperature.	Scroll through the BTU meter display pages and select the RETURN TEMP page. Note the displayed temperature and confirm that it is close to the design return temperature specified on the BTU meter certificate of calibration. Record the temperature.
13.	Select the FLOW RATE page. Note and record the flow reading.	Scroll through the BTU meter display pages and select the FLOW RATE page. Note the displayed flow rate and confirm that it is within the expected range specified on the BTU meter certificate of calibration. Record the flow rate.
14	Note and record the ENERGY RATE.	Scroll through the BTU meter display pages and select the ENERGY RATE page. Note the displayed energy rate and confirm that it appears to be correct. For water, BTU/hr is approximately = 500 * Delta-T * GPM. Divide BTU/hr by 12,000 to convert to tons.
15.	For flow meters that provide a frequency output, measure and record output(s). Compare calculated vs. displayed flow rates. **F-1200** Confirm both turbines produce pulses.	The average frequency output signal is a 0-15 VDC pulsed output ranging up to 200 Hz and must be measured with a frequency counter or oscilloscope. Measure DC Frequency (Hz) at T4 from terminal 6(+) to 7(-). GPM = Frequency in Hz x 60 / Meter Factor in ppg. (Refer to calibration tag for meter factor.) For the F-1200 dual turbine model, also measure and record the top and bottom turbine signals. Top Turbine: T4-12(+) to T4-2(-). Bottom Turbine: T4-13(+) to T4-2(-) Also, measure DC volts on same terminals. Five to 7 VDC is normal for a spinning turbine. Zero or 14+ VDC indicates a stopped turbine. (1 to 4 VDC could indicate a problem.)
16.	Compare and record the displayed values with those shown by the building control system.	Scroll through each page of the BTU meter display menu and compare the displayed values with those shown on the building control network. Record the results.
End of standard commissioning. Please contact ONICON at (727)447-6140 with any questions.		

4.6.2 Commissioning Worksheet

Please read all installation instructions carefully prior to proceeding with these steps. Wiring diagrams are located on page 20-27. Use the following worksheet for checking off the commissioning steps and recording measured values:

STEP	TEST/MEASUREMENT	S/N:	S/N:	S/N:	S/N:
1.	Meter location				
1a.	Supply/Return/Unknown				
2.	Pipe size				
3.	Insertion depth and orientation				
4.	Thermowell installation				
5.	Temperature installation				
6.	Match BTU meter, flow meter and temperature sensor serial numbers.				
7.	Verify the liquid type				
8.	Supply voltage verified (Note voltage.)				
9.	Verify flow meter and temp sensor wiring				
10.	Flow test switch position verified				
In order to proceed with the following steps, the BTU meter must be operating and connected to the network. There must also be flow in pipes. Flow signal readings should be taken while holding the flow rate constant if possible. Otherwise, take the various output readings as quickly as possible.					
11.	Note and record the SUPPLY temperature.				
12.	Note and record the RETURN temperature.				
13.	Note and record the FLOW RATE.				
14.	Note and record the ENERGY RATE.				
15.	Frequency output(s): Avg = green, Top = white Bottom = orange Avg Freq. (Hz): Avg Freq. (VDC): Top Turbine (Hz): Top Turbine (VDC): Bottom Turbine (Hz): Bottom Turbine (VDC): Calculated Flow Rate:				
16.	Compare and record the displayed values with those shown on BTU meter certificate of calibration and the network, where appropriate.				

SECTION 5.0 DIAGNOSTICS

5.1 DIAGNOSTICS

The ONICON System-10 BTU Meter uses a microprocessor to calculate energy. Factory programmed settings provide rate and total values in accordance with the customer's application data. Refer to the BTU meter certificate of calibration for a complete listing of factory settings. These settings may be reviewed and changed with assistance from ONICON.

The System-10 BTU Meter is also equipped with diagnostic indicator lights and self diagnostic test signals that confirm the operation of the microprocessor and its input circuitry. Please contact ONICON if any of the diagnostic lights or test signals listed below indicates a potential problem with the operation of the BTU meter.

5.1.1 Diagnostic Lights

Low Voltage Power Supply
Located on the power supply board inside the System-10 BTU Meter is a single LEDs that will illuminate when +15 VDC is present.

Liquid Flow
Located in the center of the motherboard next to terminal block T5, the LED will flash at a rate that is proportional to the liquid flow rate for frequency flow signals. For 4 - 20 mA signals, the light will stay lit whenever the output is greater than 4 mA. An unlit LED indicates no flow signal.

5.1.2 Flow Test Signals

Flow Test
Located in the center of the motherboard immediately above the power supply board is a three position slide switch used to test the flow input. When the switch is in the top position, the BTU meter input is connected to the flow meter. When the switch is in the middle position, the BTU meter input is connected to two test terminals used to apply a variable frequency to simulate flow. When the switch is in the bottom position, the BTU meter input is connected to a 50/60 Hz signal that simulates a fixed flow rate. Refer to the BTU meter certificate of calibration to determine the correct display reading when operating in the 50/60 Hz test mode.

IMPORTANT NOTE
The second line of the display will alternate between TEST MODE and the normal display of engineering units and multipliers whenever the flow test switch is in the TEST or 60 Hz positions.

IMPORTANT NOTE
After operating for five minutes in either the TEST or 60 Hz mode, the displayed flow and energy rate will be disabled, and the meter will report a zero flow rate and a zero energy rate to the network. The meter will remain in this state until the switch is set to RUN.

5.1.3 Temperature Test Signals

Temperature Test
As you are facing the component side of the BTU computer board, the temperature test push-button is along the top edge of the board just to the left of the flat ribbon cable. It is labeled TEMP TEST. When pressed, a fixed voltage will be applied to each temperature sensor input. Both the supply and return temperature menu pages will display a temperature between 98°F to 102°F (36.6°C to 38.9°C). This test confirms the operation of the BTU computer board input circuitry for temperature measurement.

5.2 ALARM STATUS MENU PAGE

Alarm Status Menu Page - STATUS NORMAL indicates normal operation.
The display will indicate STATUS ALARM when any one of the 5 alarms listed below is present

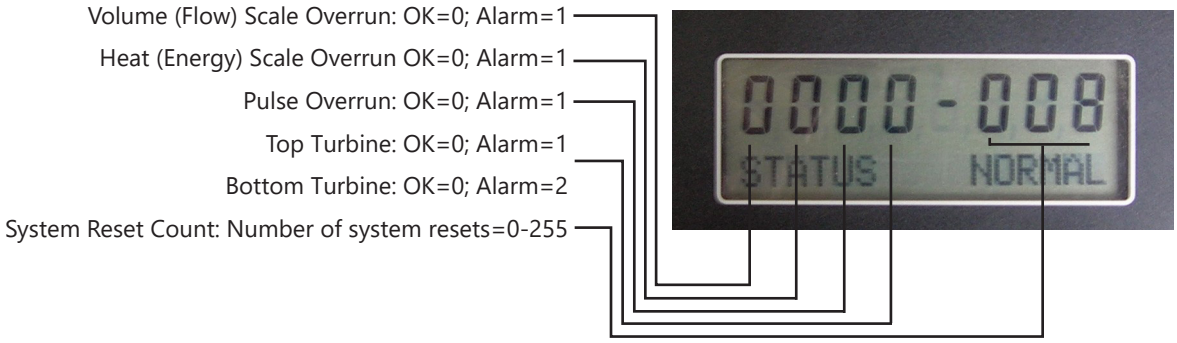

Volume (Flow) Scale Overrun – This alarm is present whenever the volume flow rate causes the incremental volume total to accumulate at a rate that is too fast.

To clear this alarm message, first confirm that the flow rate data and pipe diameter data on the tag attached to the meter corresponds with the actual flow rate and actual pipe diameter. Any mismatch between the calibrated and actual flow rates or the calibrated and actual pipe diameter will cause this alarm message to appear. Contact ONICON for assistance in correcting this condition.

Heat (Energy) Scale Overrun – This alarm is present whenever the energy flow rate causes the incremental energy total to accumulate at a rate that is too fast.

To clear this alarm, first confirm that the actual temperature sensor readings and the actual flow reading are within expected norms and match the calibration data provided for the System-10 BTU Meter. Either an excessively high delta temperature or an unexpectedly high flow rate can cause this alarm message to appear. Contact ONICON for assistance in correcting this condition.

Pulse Overrun – This alarm is present whenever the incremental energy total is accumulating at a rate that exceeds the time interval required for the 50% duty cycle of the pulse.

This alarm will normally coincide with either the volume scale or heat scale alarms. That message must be cleared before this message can be cleared. Contact ONICON for assistance in correcting this condition.

Top Turbine – This alarm will occur whenever zero pulses are accumulated from the top turbine while simultaneously pulses are accumulating from the bottom turbine. To clear this alarm, the flow meter should be physically inspected to determine why the top turbine is not rotating.

Bottom Turbine – This alarm will occur whenever zero pulses are accumulated from the bottom turbine while simultaneously pulses are accumulating from the top turbine. To clear this alarm, the flow meter should be physically inspected to determine why the bottom turbine is not rotating.

System Reset Count – The last 3 digits on the display indicate the total number of system resets that have occurred since the current version of the firmware was loaded.

5.3 TROUBLESHOOTING

Refer to the COMMISSIONING GUIDE located on the preceding pages.

REPORTED PROBLEM	POSSIBLE SOLUTIONS
For turbine meters - No flow signal / energy rate (while hydronic system is active)	• Verify 24 VDC supply voltage to the flow meter. • For insertion meters, verify the flow meter is correctly inserted into the pipe (using depth gage). • For insertion meters, verify that the flow meter electronics enclosure is parallel with the pipe. • Verify correct wiring to the flow meter (see wiring diagram). • For turbine meters, check turbine(s) for clogging due to debris. • If none of the above, check hydronic system to ensure that flow is really present in the line. • NOTE: Flow meter function cannot be verified by blowing on the turbine(s). The sensing system requires a conductive liquid to operate. You can test it by swirling it around in a bucket of water and looking for the flow indicator LED to flash at the System-10.
Displayed flow rate too high, too low, or does not change	• Verify pipe size. Contact ONICON if pipe size is different from calibration tag. • For insertion meters, verify that meter is inserted correctly into the pipe (using depth gage). • For insertion meters, verify that the flow meter electronics enclosure is parallel with the pipe. • For dual turbine meters, confirm that both turbines produce pulses. • For turbine meters, check turbine(s) for debris. • Verify supply voltages (to BTU meter and flow meter). • Verify that the flow signal switch is in the run position (see Section 5.1.2)
Displayed temperature(s) too high or too low vs. expected values	• Verify wiring to temperature sensor(s), including polarity. • Verify that thermowells are inserted into the flow stream and that the temperature sensors are completely inserted into the thermowells.

APPENDIX A – DRAWINGS

A-1	**OUTDOOR THERMOWELL ASSEMBLY**
A-2 & A-3	**HEAVY DUTY THERMOWELL FOR HIGH TEMPERATURE / PRESSURE (2 Pages)**
A-4	**MOTHER BOARD**
A-5	**COMM BOARD**
A-6	**POWER SUPPLY BOARD**
A-7	**ANALOG OUTPUT BOARD (with 1 analog output)**
A-8	**ANALOG OUTPUTS BOARD (with 4 analog outputs)**

OUTDOOR THERMOWELL ASSEMBLY IN WELDED PIPE

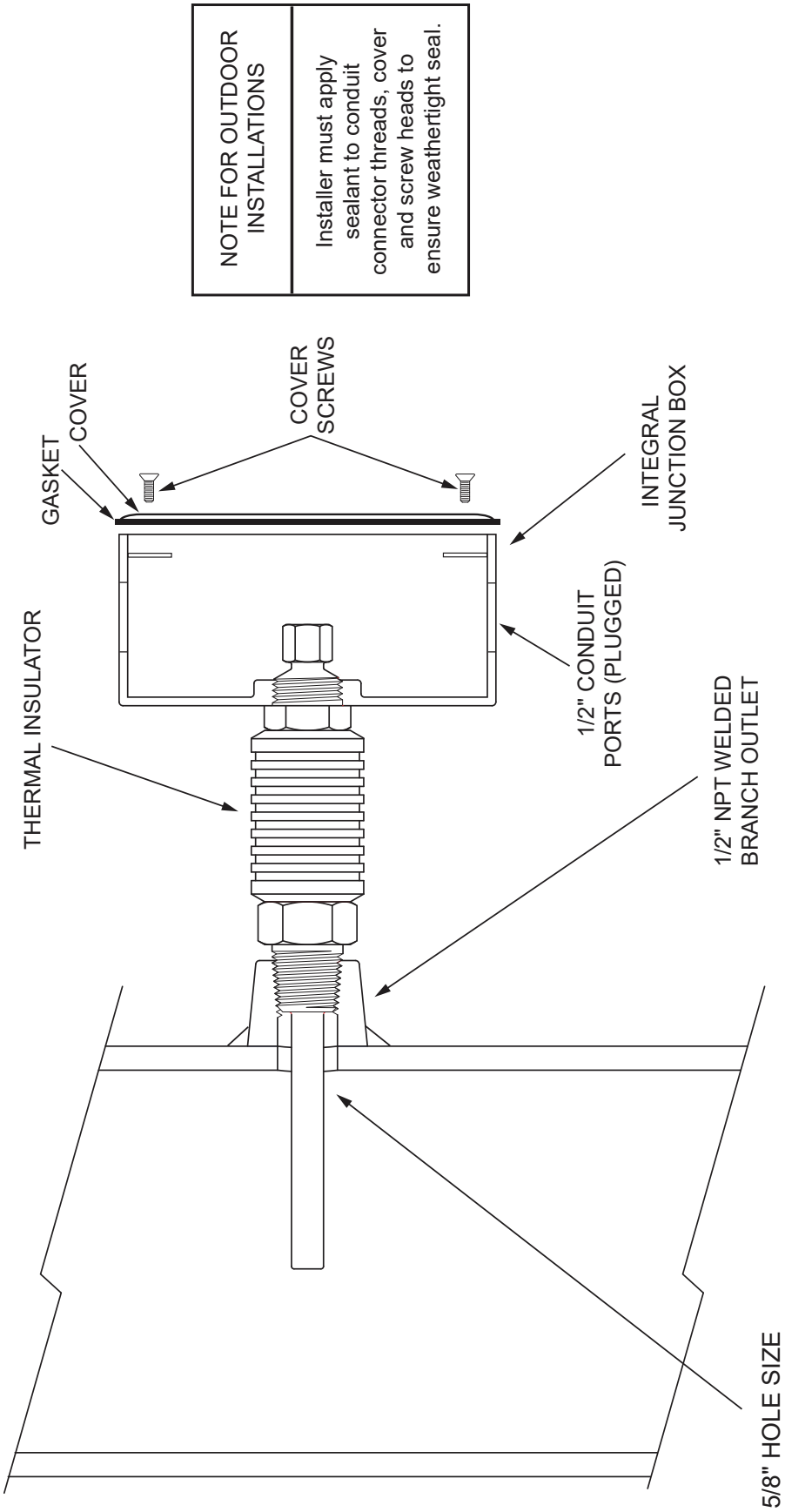

NOTE FOR OUTDOOR INSTALLATIONS	Installer must apply sealant to conduit connector threads, cover and screw heads to ensure weathertight seal.

HEAVY DUTY THERMOWELL ASSEMBLY FOR SYSTEM-10 BTU METERS FOR PROCESS TEMPERATURES OVER 300°F

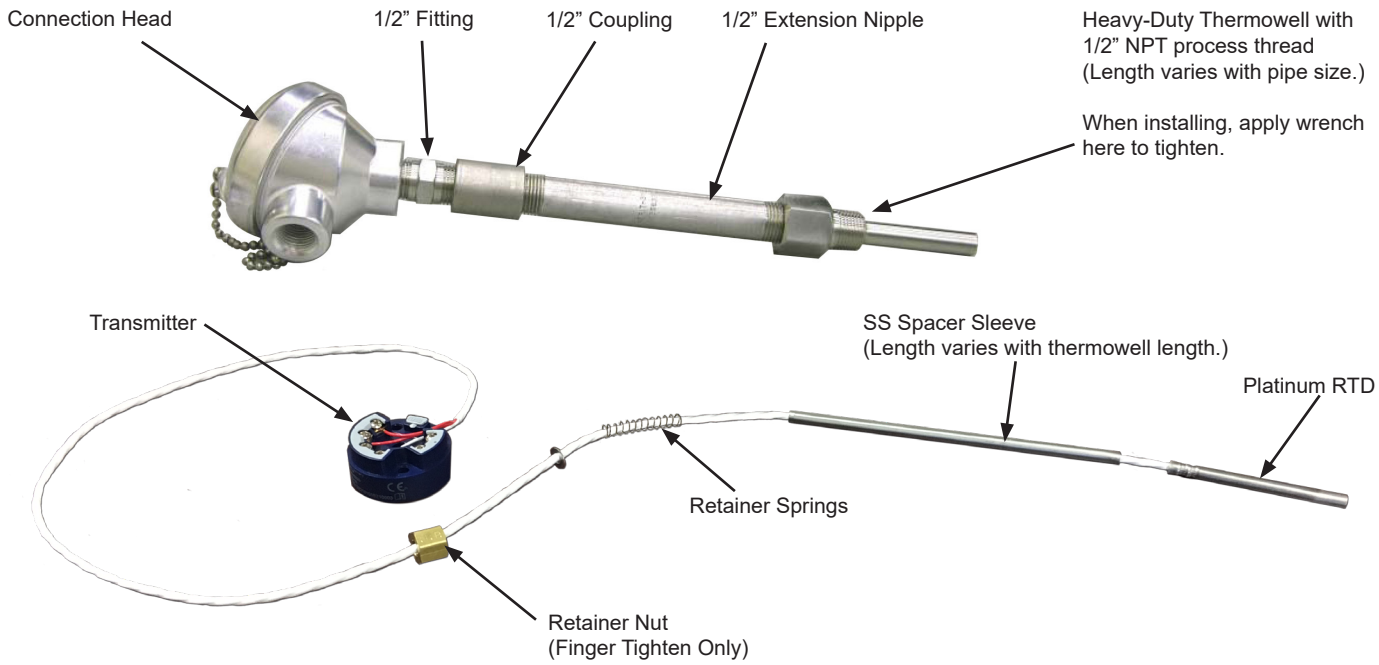

IMPORTANT NOTE
The thermowell, extension nipple, coupling and fitting were made to a specific length. DO NOT attempt to change the length of this assembly.

Step 1:
Drill 7/8” hole in pipe. Install thermowell using fittings supplied by ONICON.

Complete steps 2 - 4 only after all welding, brazing & soldering are complete.

IMPORTANT NOTE
Each RTD and transmitter pair are matched at the factory and calibrated for a specific BTU meter. Do not separate the RTD from the transmitter and use care to ensure that the serial number on the transmitter matches the serial number of the BTU meter.

Step 2:
Remove lid and insert RTD assembly into thermowell, ensuring that it bottoms out. Thermal compound may be used; apply only a pea-sized amount to the tip of the RTD prior to insertion.

Thread retaining nut onto fitting inside the bottom of connection head. Hand tighten the retainer nut.
DO NOT OVERTIGHTEN.

Step 3:
Place the transmitter over the retainer nut, gently guiding the excess wire through the center hole of the transmitter. Use caution to avoid pinching the wires.

Step 4:
Connect field wires from the System-10 BTU meter to the transmitter as shown. Carefully coil extra wire around the transmitter and thread the lid onto the connection head.

IMPORTANT NOTE
In 1" pipe, thermowell must be installed in a customer provided tee as shown below.

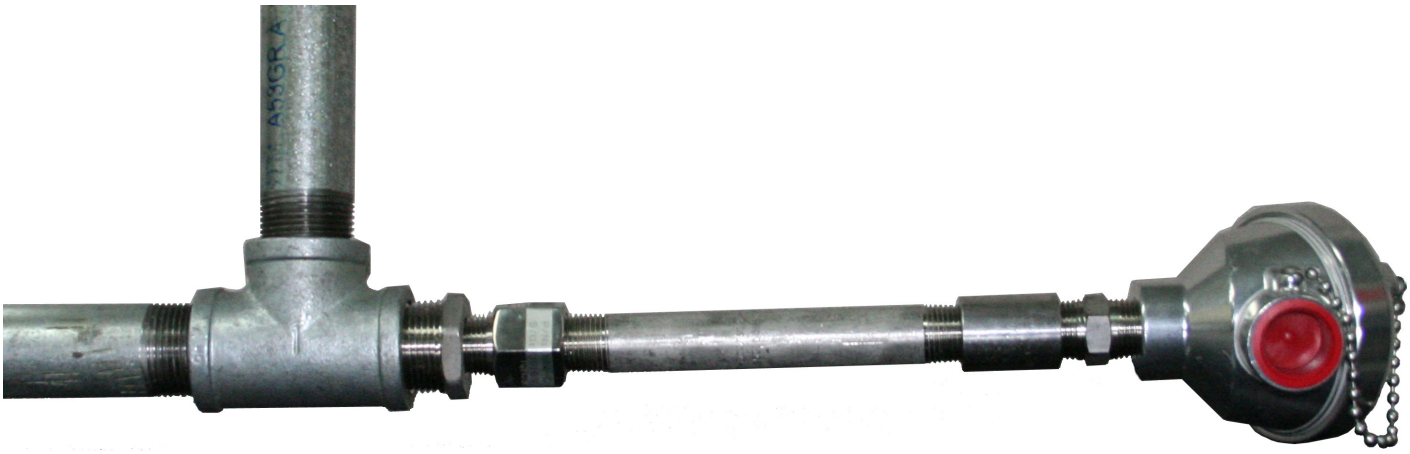

The thermowell, extension nipple, coupling and fitting were made to a specific length.

DO NOT attempt to change the length of this assembly.

SYSTEM-10 BTU METER MOTHER BOARD

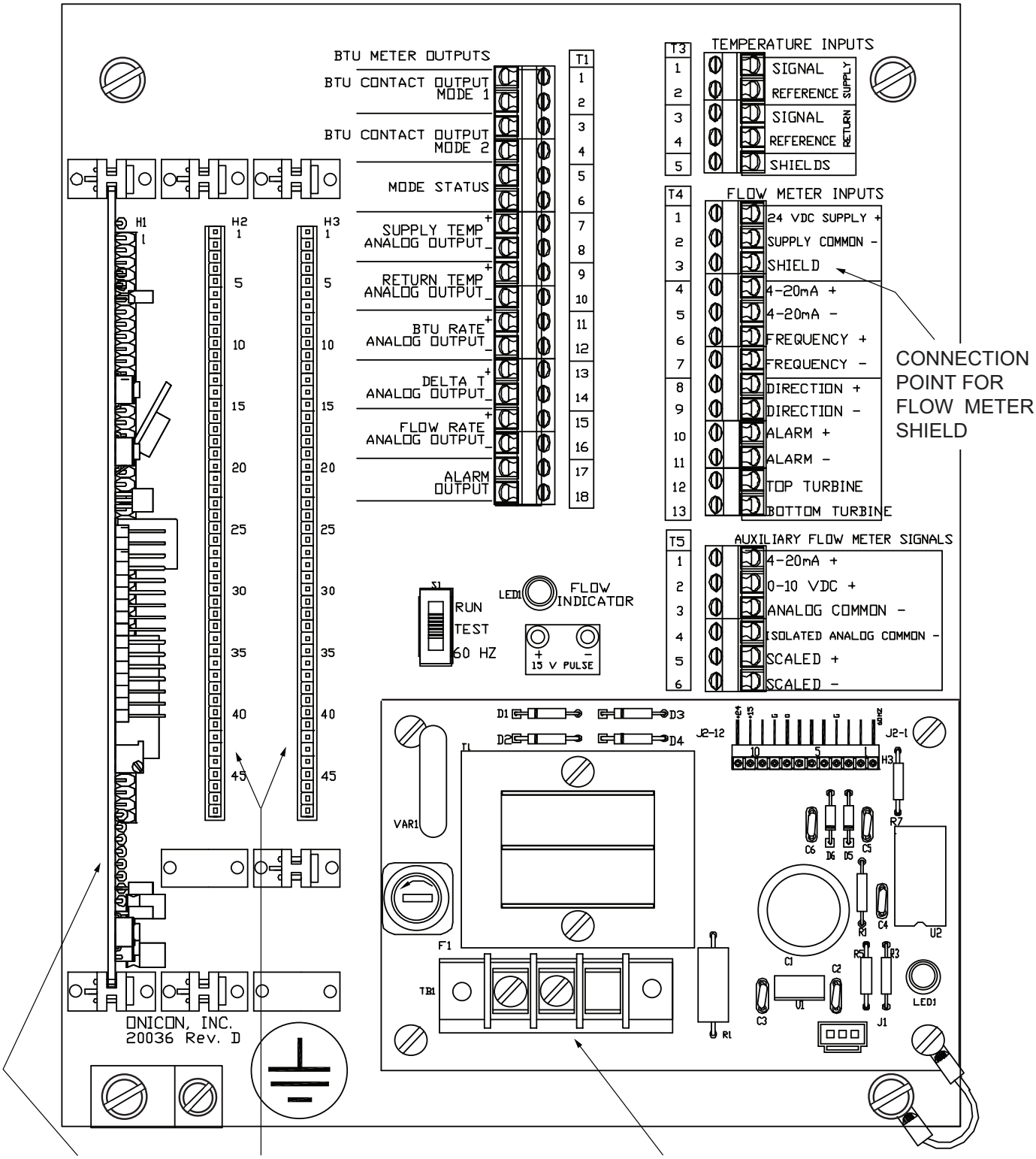

BTU COMPUTER BOARD

EXPANSION SLOTS FOR
1. COMMUNICATIONS BOARD
2. ANALOG OUTPUT BOARD

POWER SUPPLY
Standard: 120 VAC
Optional: 24 VAC

SYSTEM-10 BTU METER COMM BOARD

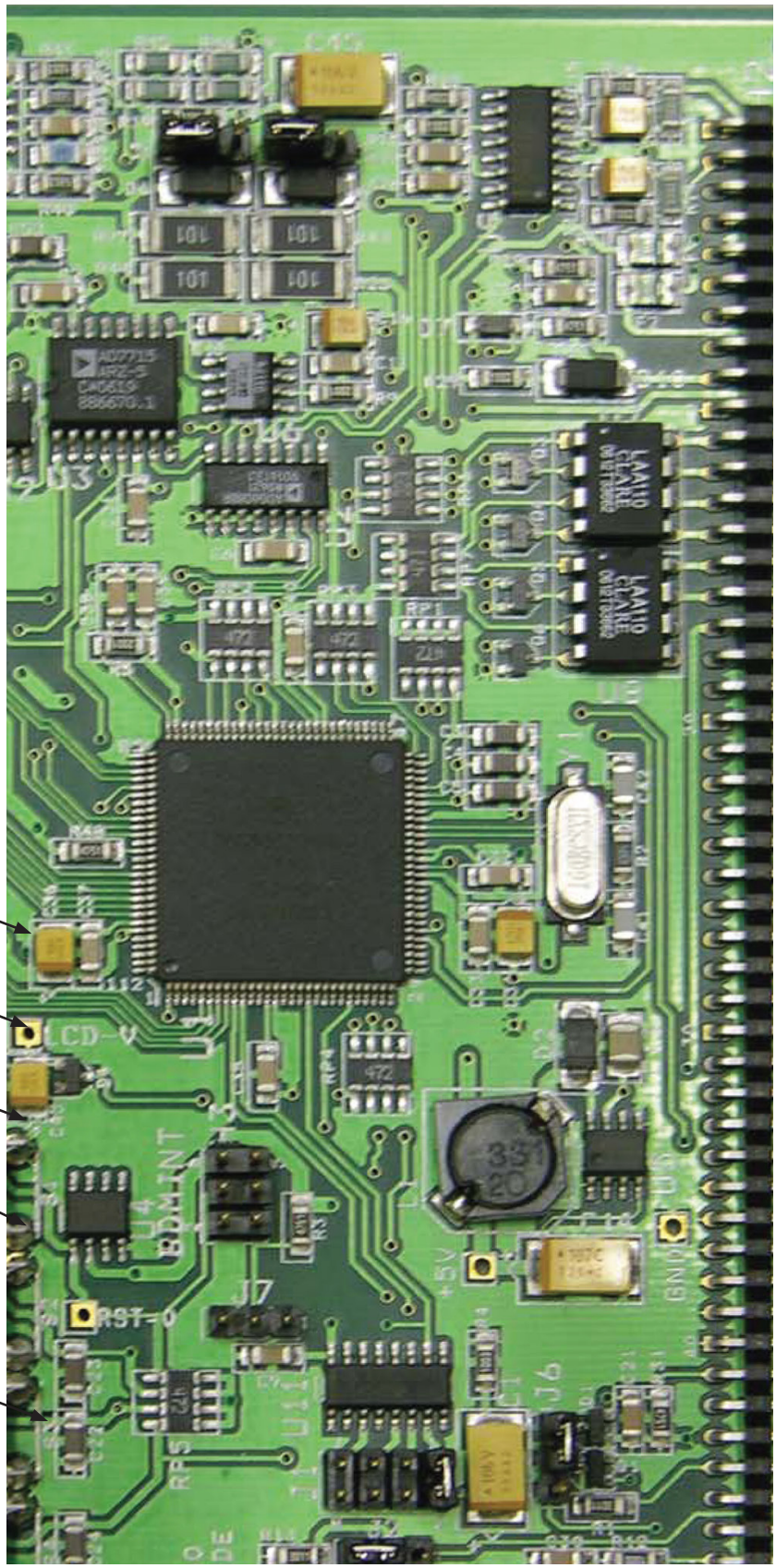

SYSTEM-10 BTU METER POWER SUPPLY BOARD

24 VAC - 1 Amp Slo-Blo, 3AG Fuse

120 VAC - 1/4 Amp Slo-Blo, 3AG Fuse

240 VAC - 1/8 Amp Slo-Blo, 3AG Fuse

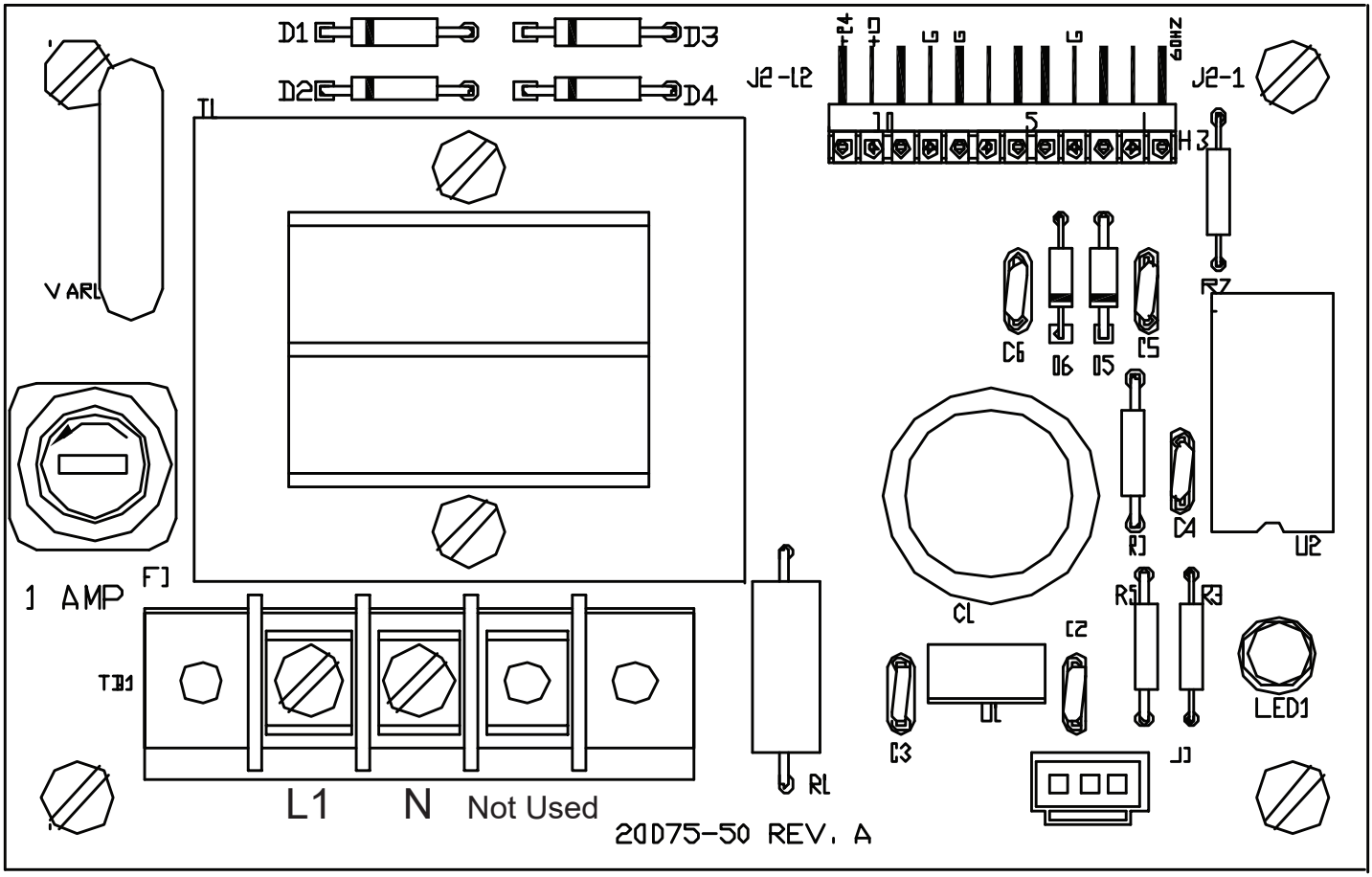

SYSTEM-10 BTU METER ANALOG OUTPUT BOARD WITH 1 ANALOG OUTPUT

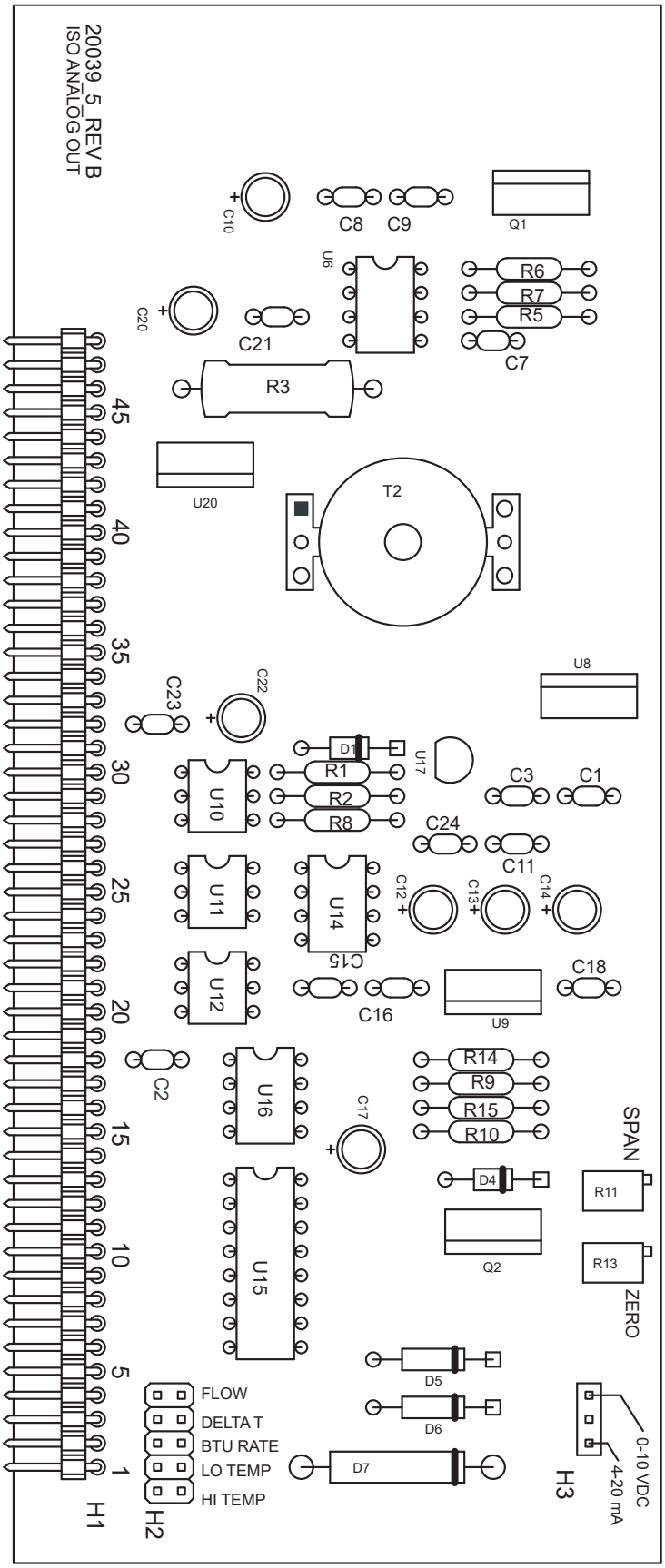
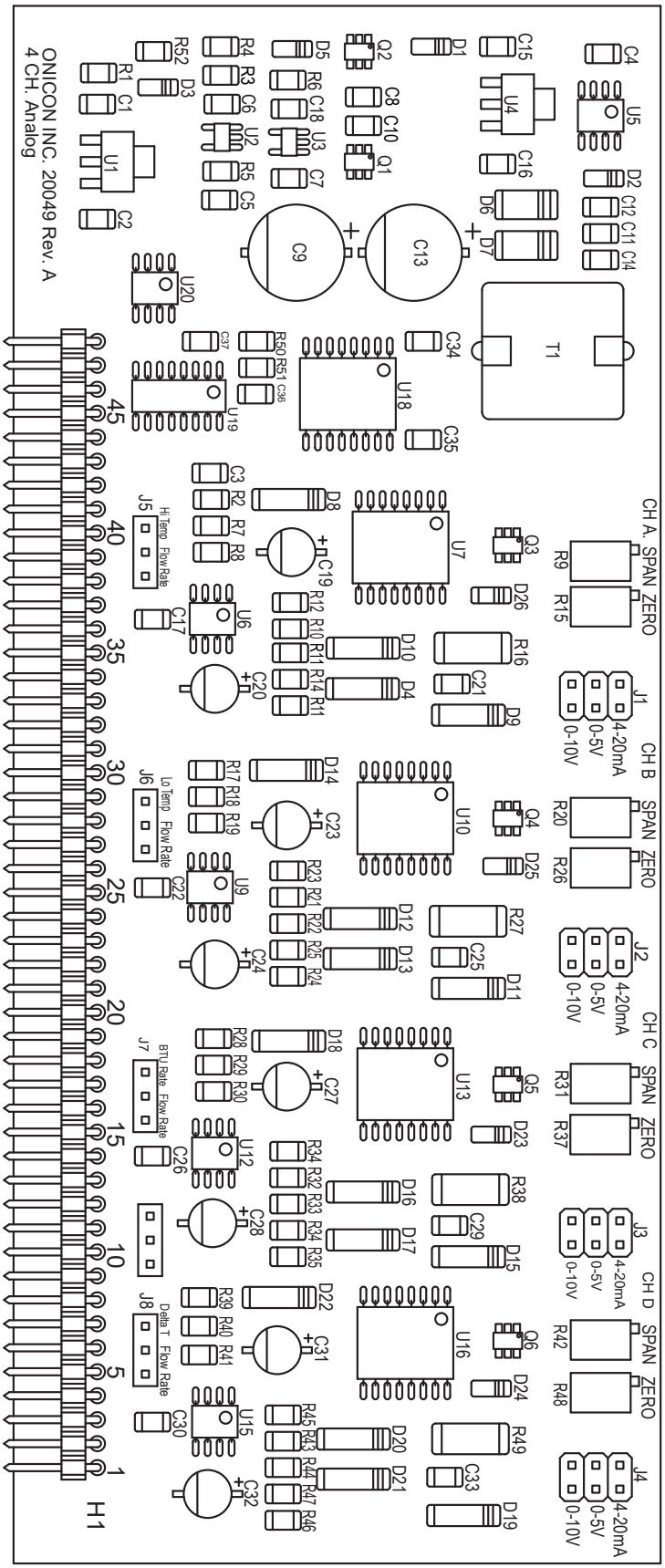
SYSTEM-10 BTU METER ANALOG OUTPUTS BOARD WITH 4 ANALOG OUTPUTS