FT-4600

INLINE ULTRASONIC FLOW METER
Installation and Operation Guide

ONICON
Flow and Energy Measurement

DOC-0005361 Rev.D

SAFETY INFORMATION

The FT-4600 meter was calibrated at the factory before shipment. To ensure correct use of the meter, please read this manual thoroughly.

Regarding this manual:

- This manual should be passed on to the end user.
- Before use, read this manual thoroughly to comprehend its contents.
- The contents of this manual may be changed without prior notice.
- All rights reserved. No part of this manual may be reproduced in any form without ONICON Incorporated's written permission.
- ONICON makes no warranty of any kind with regard to this material, including, but not limited to, implied warranties of merchantability and suitability for a particular purpose.
- All reasonable effort has been made to ensure the accuracy of the contents of this manual. However, if any errors are found, please inform ONICON Incorporated.
- ONICON assumes no responsibilities for this product except as stated in the warranty.
- If the customer or any third party is harmed by the use of this product, ONICON assumes no responsibility for any such harm owing to any defects in the product which were not predictable, or for any indirect damages.

SAFETY PRECAUTIONS:

The following general safety precautions must be observed during all phases of installation, operation, service, and repair of this product. Failure to comply with these precautions or with specific WARNINGS given elsewhere in this manual violates safety standards of design, manufacture, and intended use of the product. ONICON assumes no liability for the customer's failure to comply with these requirements. If this product is used in a manner not specified in this manual, the protection provided by this product may be impaired.

The following messages are used in this manual:

WARNING
Messages identified as "WARNING" contain information regarding the personal safety of individuals involved in the installation, operation or service of this product.

CAUTION
Messages identified as "CAUTION" contain information regarding potential damage to the product or other ancillary products.

IMPORTANT NOTE
Messages identified as "IMPORTANT NOTE" contain information critical to the proper operation of the product.

TABLE OF CONTENTS

SECTION 1.0 GENERAL INFORMATION 4
1.1 PURPOSE OF THIS MANUAL 4
1.2 TYPICAL FT-4600 FLOW METER 4
1.3 STANDARD FEATURES AND SPECIFICATIONS 4
1.4 WORKING ENVIRONMENT 6
1.5 SERIAL NUMBER 6

SECTION 2.0 UNPACKING 6
2.1 CHECKING THAT YOU HAVE RECEIVED EVERYTHING 6

SECTION 3.0 INSTALLATION 7
3.1 SITE SELECTION 7
3.2 INSTALLING THE FLOW METER 9
3.3 POWER & SIGNAL WIRING CONNECTIONS 13
3.4 INTERNAL WIRING AND CONTROLS 14

SECTION 4.0 DIAGNOSTICS 15
4.1 FLOW SIMULATION 15
4.2 LED STATUS 15
4.3 FLUID TYPE 15

SECTION 1.0 GENERAL INFORMATION

We at ONICON Incorporated would like to thank you for purchasing our quality American made FT-4600 Inline Ultrasonic Flow Meter. As our valued customer, our commitment to you is to provide fast reliable service, while continuing to offer quality products to meet your growing flow measurement needs.

1.1 PURPOSE OF THIS MANUAL

The purpose of this guide is to provide installation and commissioning procedures and basic operating and servicing instructions for the ONICON FT-4600 Flow Meter.

CAUTION
Only qualified service personnel should attempt to install or service this product. The improper installation or use of this product may result in a loss of integrity in the piping system.

1.2 TYPICAL FT-4600 FLOW METER INSTALLATION

The FT-4600 Inline Flow Meter utilizes direct path wetted ultrasonic tranducers for measuring the volumetric flow of liquids in a wide variety of applications.

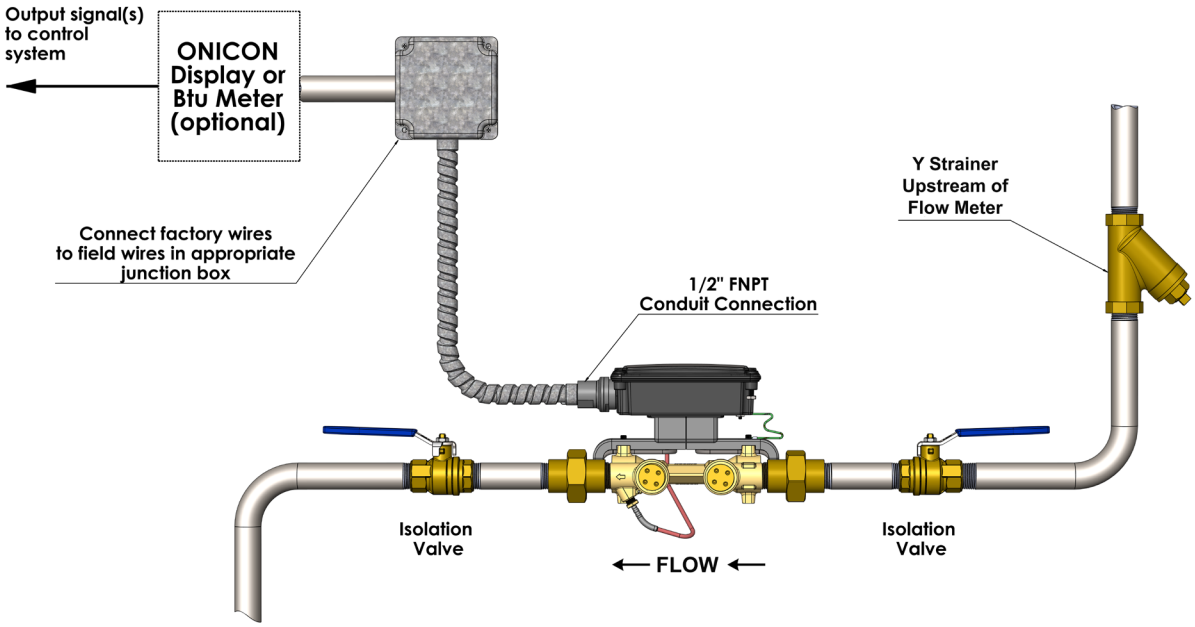

1.3 STANDARD FEATURES AND SPECIFICATIONS

- 4-20 mA output for flow rate
- Scaled pulse output for totalization
- All weather NEMA4 enclosure
- ANSI/NSF 61 & 372 compliant
- LED alarm for meter diagnostics
- FCC: Part 15, Subpart B compliant
- EN 61326-1:203, EN 55011:2009 compliant

1.3 STANDARD FEATURES AND SPECIFICATIONS (CONTINUTED)*

ACCURACY	±1% of reading over 25:1 turndown ±2% of reading over 100:1 turndown Repeatability: ≤± 0.2%
OVERALL FLOW RANGE	500:1 turndown
SENSING METHOD	Direct beam path wetted ultrasonic sensors utilizing differential transit time velocity measurement
METER SIZES	½ - 2½" nominal diameter
ELECTRONIC ENCLOSURE	Polycarbonate NEMA4
FLOW BODY AND SENSOR MATERIAL	Lead-free brass flow body, (PPS) with 40% glass-reinforced transducer
PIPING SYSTEM CONNECTIONS	Male NPT threads 2½" meter provided with ANSI Class 150 raised face flanges
INTERNAL TEMPERATURE SENSOR	2-wire 1000Ω platinum RTD
FLUID TEMPERATURE RANGE	0°F to 250°F
AMBIENT TEMPERATURE RANGE	-13°F to 131°F
MAXIMUM OPERATING PRESSURE	400 psi
PRESSURE DROP	Less than 1 psi at 4 ft/s, decreasing at lower velocities
POWER SUPPLY REQUIREMENTS	20-28V AC/DC; 50/60 Hz, 5 VA maximum
ANALOG OUTPUT	Configurable as 4-20mA (non-isolated, active) Optional 0-5 V or 0-10 V output
ISOLATED TOTALIZING SOLID STATE CONTACT CLOSURE PULSE OUTPUTS	Contact ratings: 50mA, 30 VDC maximum Contact Pulse duration: 1000 ms

***** SPECIFICATIONS subject to change without notice.

Meter Size	Process Connection Type	Typical Design Flow	Minimum Flow	Flow @ Max Analog Output	1% of Rate Flow Range	2% of Rate Flow Range	C_v	Flow per Scaled Pulse
(Nominal)	(Nominal)	(gpm)	(gpm)	(gpm)	(gpm)	(gpm)	(gpm)	(gal)
½"	Male NPT	6.6	0.03	15	0.6 – 15	0.15 – 0.6	6.08	1
¾"	Male NPT	6.6	0.03	15	0.6 – 15	0.15 – 0.6	6.08	1
¾" (high flow)	Male NPT	11	0.05	25	1.0 – 25	0.25 – 1.0	8.81	1
1"	Male NPT	11	0.05	25	1.0 – 25	0.25 – 1.0	8.81	10
1" (high flow)	Male NPT	15.4	0.07	35	1.4 – 35	0.35 – 1.4	12.17	10
1¼"	Male NPT	26.4	0.12	60	3.0 – 60	0.6 – 3.0	36.95	10
1½"	Male NPT	44	0.2	100	5.0 – 100	1.0 – 5.0	51.20	10
2"	Male NPT	66	0.3	150	8.0 – 150	1.5 – 8.0	101.2	10
2½"	Class 150 Flange	110	0.5	2251	12 - 225	2.5 - 12	156.2	10

Pressure Drop Calculation

$$\Delta p = \left(\frac{Q}{C_v}\right)^2$$

Where: Q = Flow Rate (GPM)
Cv = Flow Coefficient
Δp = Pressure Loss (PSI)

1.4 WORKING ENVIRONMENT

- The FT-4600 is designed for indoor or outdoor installations in residential, commercial, and light industrial applications.
- The environment shall be free of corrosive liquids and fumes, temperature extremes, and excess vibration.
- Avoid installing the meter in direct sunlight.
- The operating ambient air temperature range is -13°F to 131°F
- The supplied electrical power should be relatively clean, free of high frequency noise, and without large voltage transients.

1.5 SERIAL NUMBER

The serial number of your FT-4600 is located on the side of the enclosure. The serial number is a unique identifier for the product. Please have this number available when contacting ONICON for assistance.

SECTION 2.0 UNPACKING

The FT-4600 is generally shipped in on package unless optional hardware or equipment is ordered.

In the event that the meter is damaged in transit, notify the freight carrier and ONICON. ONICON recommends taking pictures of the damage to both the product and the packaging. Do not dispose of the packaging in case the freight carrier wants to inspect it.

2.1 CHECKING THAT YOU HAVE RECEIVED EVERYTHING

The following items have been provided with your FT-4600 Flow Meter:

(2) Line size process connection meter couplings* with male NPT threads and sealing gaskets (shipped attached to meter)
(1) FT-4600 Meter Certificate of Calibration
(1) FT-4600 Meter Quick Start Guide

Please notify ONICON if any of these items are missing.

* NOTE: The 2½" version of the meter is provided with flanges.

SECTION 3.0 INSTALLATION

The FT-4600 Flow Meter should be installed by experienced plumbers, electricians, and others with related knowledge and experience in the heating, cooling, and fluid metering fields. ONICON technical support personnel are available via telephone or e-mail to provide technical assistance before, during and after installation. The installer should use good trade practices and must adhere to all applicable state and local building or other codes. See the last page of this manual for ONICON technical support contact information.

3.1 SITE SELECTION

Careful attention to the site selection for the meter will help the installers with the initial installation, reduce start-up problems, and make future maintenance easier. For example, do not install the meter where it will be difficult for personnel to perform periodic maintenance. When selecting a site, consider the criteria under Section 1.4: WORKING ENVIRONMENT, as well as the information below.

The following limitations apply to the installation of the meter:

- The flow meter must be correctly oriented with respect to the direction of flow in the pipe. Meters installed with reversed flow will not function.
- The maximum operating pressure for the flow meter is 400 psi.
- Do not install the meter in close proximity to strong sources of electromagnetic interference (e.g. electric motors, VFD's, fluorescent light fixtures, etc.)

TOP VIEW

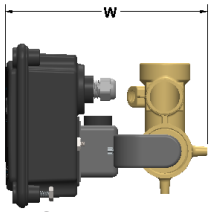

SIDE VIEW

U-Body Overall Dimensions				
Size	L Total	L	W	H
½"	11.2"	7.48"	5.55"	4.50"
¾"	11.7"	7.48"	5.55"	4.50"
¾" high flow	11.7"	7.48"	5.55"	4.50"
1"	12.3"	7.48"	5.55"	4.50"
1" high flow	15"	10.23"	5.55"	4.65"

TOP VIEW

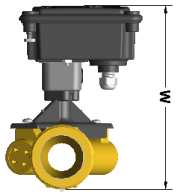

SIDE VIEW

Crossfire Overall Dimensions				
Size	L Total	L	W	H
1 ¼"	15.25"	10.20"	6.42"	4.92"
1 ½"	17.00"	11.80"	6.68"	5.00"
2"	17.60"	11.80"	7.09"	5.14"
2 ½"	N/A	11.81"	9.25"	7.00"

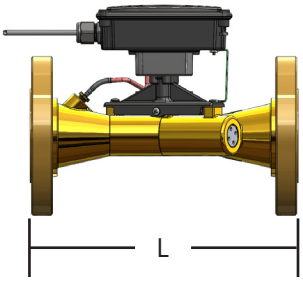

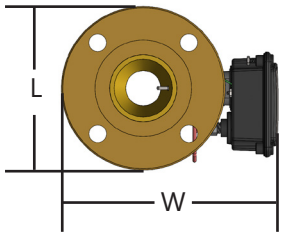

3.1 SITE SELECTION (CONTINUED)

STRAIGHT RUN REQUIREMENTS

Upstream straight unobstructed pipe requirements vary considerably based on the nature of the upstream obstructions. As a general rule, ONICON recommends a minimum of 10 diameters of straight unobstructed pipe whenever possible; keeping in mind that it is always recommended that the meter be located with as much straight pipe upstream as possible.

Minimum Upstream Straight Run Required (Pipe Diameters)		
Upstream Obstruction	Meter Size	
	0.5 - 1.0"	1.25 - 2.5"
Single Elbow	0	0
Expander / Reducer	0	0
Coil, Upstream	3	3
Isolation Valve, 2 Position	3	5
Control Valve	10	15

Notes:	
1	Straight run is based on use of manufacturer provided couplings
2	Avoid the following obstructions where possible: Modulating valves, pump discharge, Multiple elbows out of plane.

INSTALLATION LOCATION DIAGRAMS

Please refer to the diagrams and notes below when selecting the installation location. ONICON recommends installing isolation valves before and after the flow meter to facilitate removal if service is required.

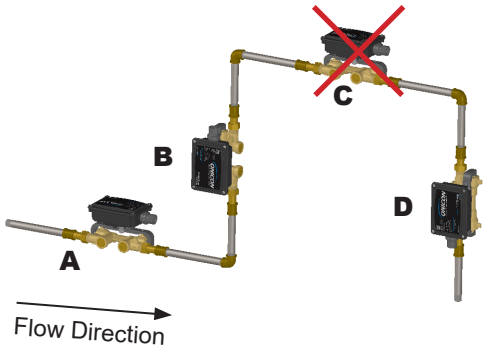

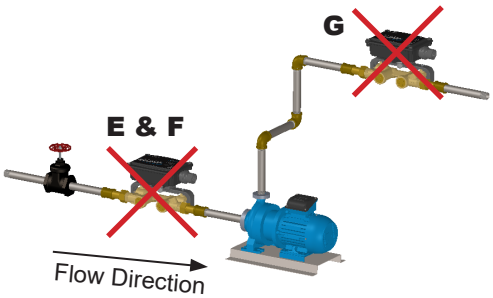

A. This is a recommended position for the flow meter.
B. This is a recommended position for the flow meter.
C. Avoid installation locations where air can become trapped in the piping system, for example, meters installed between two vertical runs, at a high elevation.
D. This is an acceptable installation location for closed loop pressurized systems.
E. Do not install the meter downstream of modulating valves or partially open valves. Fully open isolation valves (e.g. ball valves) are OK.
F. Do not install the flow sensor at the inlet of a pump. To prevent cavitation, the minimum operating pressure at the inlet of the meter must always exceed the pressure drop across the meter. Refer to Appendix A-1 for calculating pressure the drop at different flow rates.
G. Avoid installing the meter downstream of multiple bends out of plane with each other where there are less than 10 diameters of straight unobstructed pipe between bends.

3.2 INSTALLING THE FLOW METER

ONICON recommends installing isolation valves before and after the flow meter location to facilitate removal if service is required.

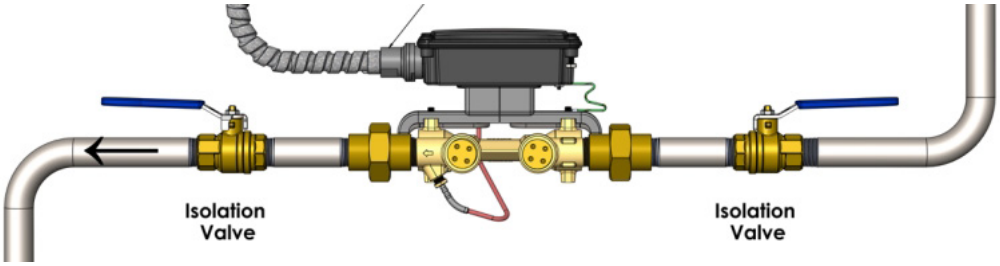

Flush piping system thoroughly before installing the flow meter

The flow meter is installed as shown below. Orient the sensor body by aligning the flow direction arrow with the direction of flow in the pipe.

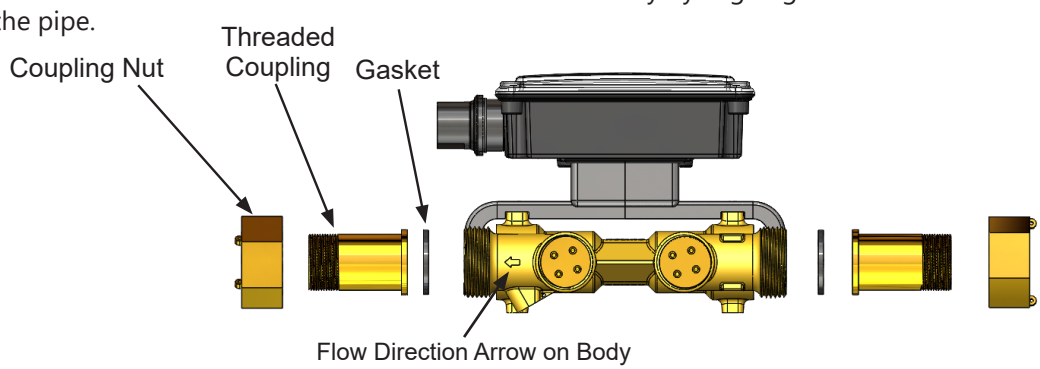

Model	Meter Size	Min. Compression	Min. Turn Past Initial Contact	Degrees of Rotation
FT-4600-050	½″	30%	1/2	180°
FT-4600-340	¾″	30%	1/3	120°
FT-4600-341	¾″	30%	1/3	120°
FT-4600-010	1″	30%	2/5	140°
FT-4600-011	1″	30%	2/5	140°
FT-4600-130	1¼″	30%	2/5	140°
FT-4600-150	1½″	30%	4/9	160°
FT-4600-200	2″	30%	1/2	180°

<u>INSTALLING METER COUPLINGS</u>

- Inspect seating surfaces on the meter's body prior to assembly. Surfaces should be clean and free of any burs or markings.
- Install the gasket between the threaded coupling and the meter body. Thread the coupling nut onto the meter body, by hand, until both mating surfaces make contact with the gasket. Mark the threaded coupling and coupling nut with a straight line across both pieces.
- Place a corresponding mark on the coupling nut, # of degrees (based on table above) counter clockwise. Hold meter body while rotating coupling nut clockwise until marks line up. DO NOT over-tighten.
- Repeat process on opposite side of flow meter body.
  NOTE: Torque setting is not an accurate means of gaging compression on gasket due to the lack of resilience in the gasket material.

Pressurize system and check for leaks. If any leak is present, DO NOT over-tighten. Relieve pressure and loosen coupling nuts. Remove and inspect the gasket for damage. Repeat installation process.

Orient the meter as shown below. The meter may be installed with upward or downward flow in vertical pipes in closed loop pressurized systems. Avoid any installation locations where the pipe may not be completely full.

Meter Sizes ½ - 1”

Preferred Orientation for Horizontal Pipes

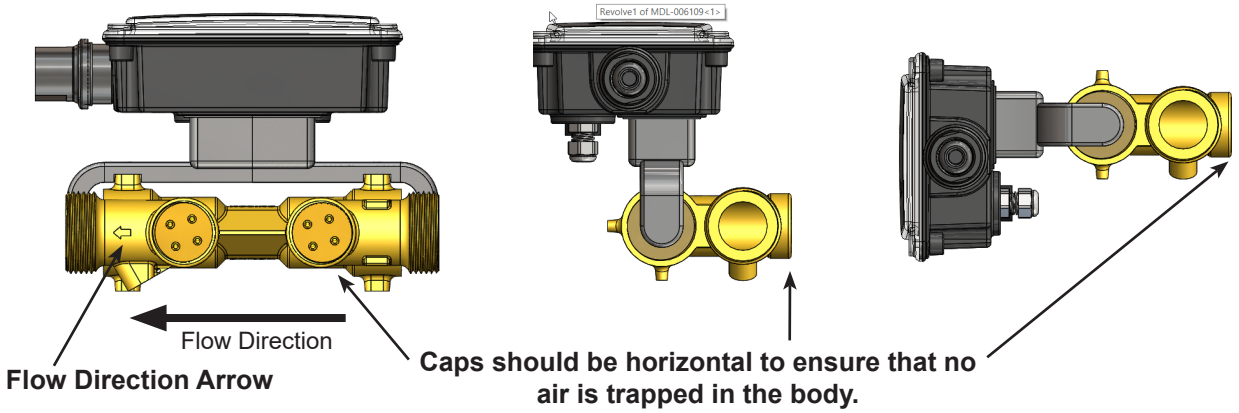

Do not orient meter as shown below

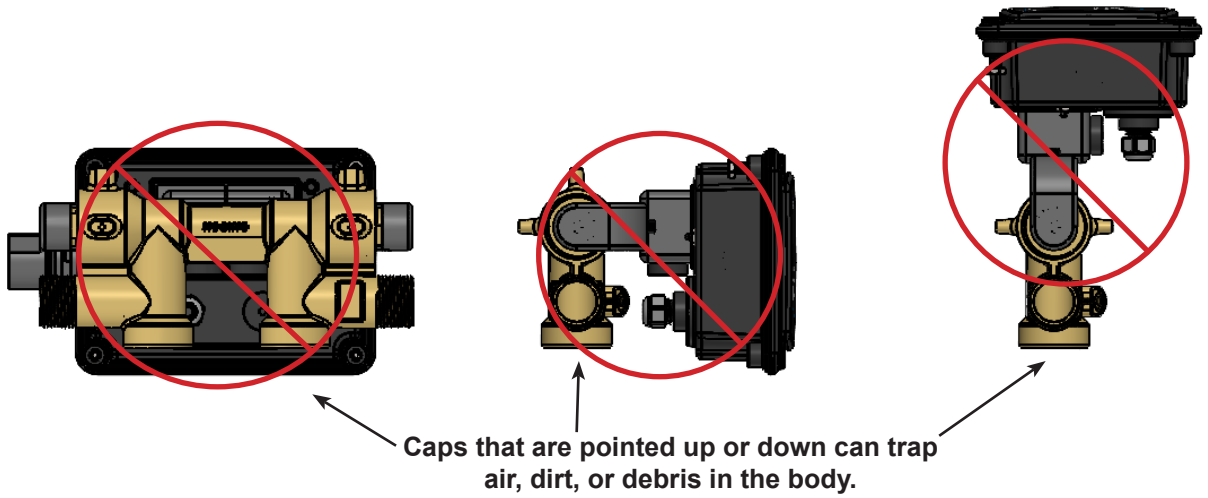

Meter Sizes 1¼ - 2.5”

Preferred Orientation for Horizontal Pipes

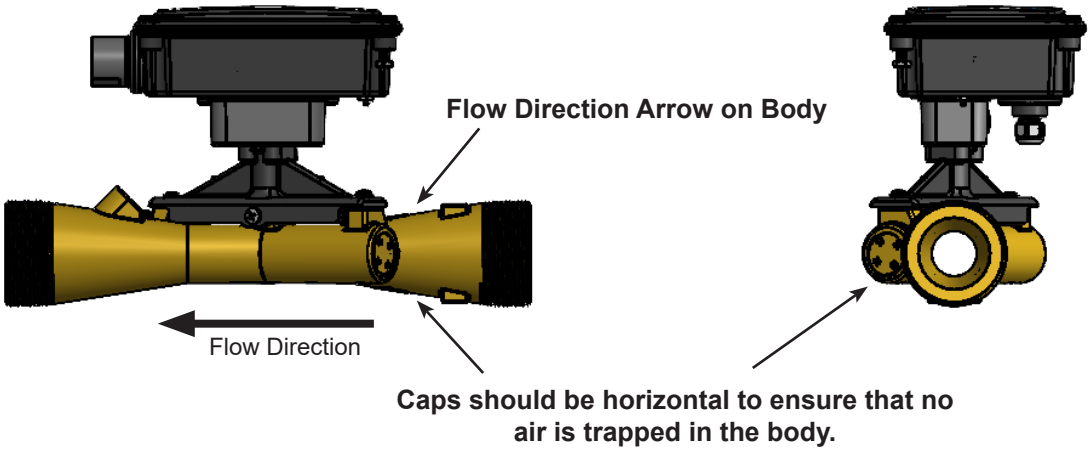

Do not orient meter as shown below

Meter Size 2.5”

Preferred Orientation for Horizontal Pipes

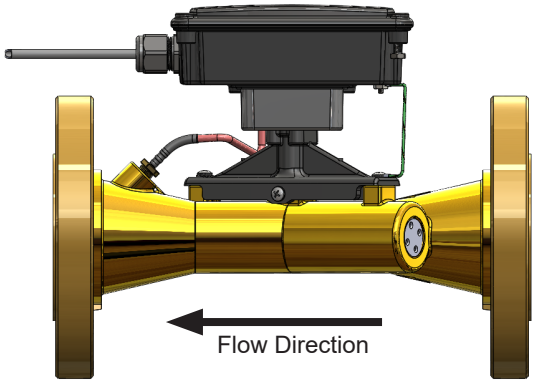

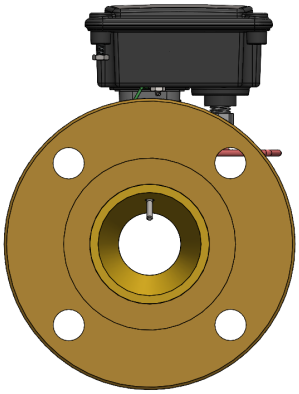

Side View

Do not orient meter as shown below

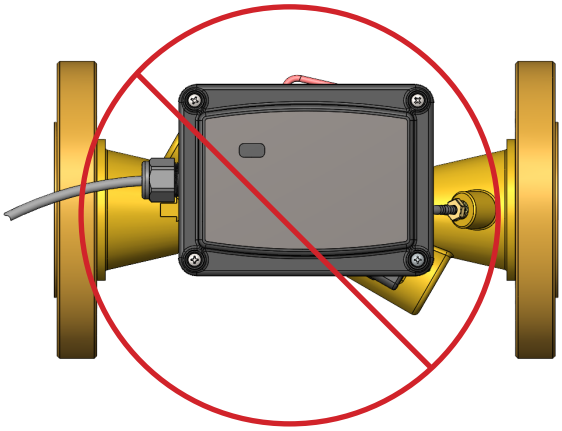

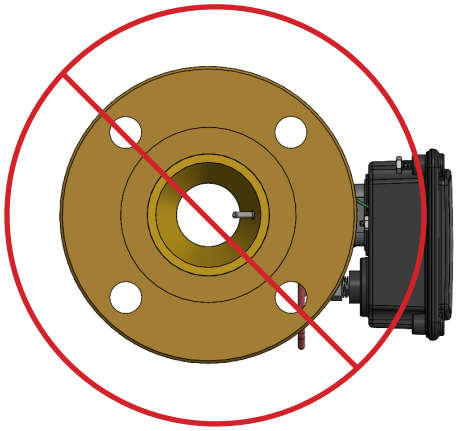

IMPORTANT NOTE
Before connecting any meter wiring or power, open the isolation valves, purge air from the pipe system, and test the assembly for leaks.

3.3 POWER AND SIGNAL WIRING CONNECTIONS

The FT-4600 is provided with an unterminated 10 foot PVC jacketed cable for power and signal connections. **Do not attempt to remove this cable**. Doing so will damage the weather-tight seal and may void the product warranty. Use AWG 18 - 22 shielded cable for power and signal connections.

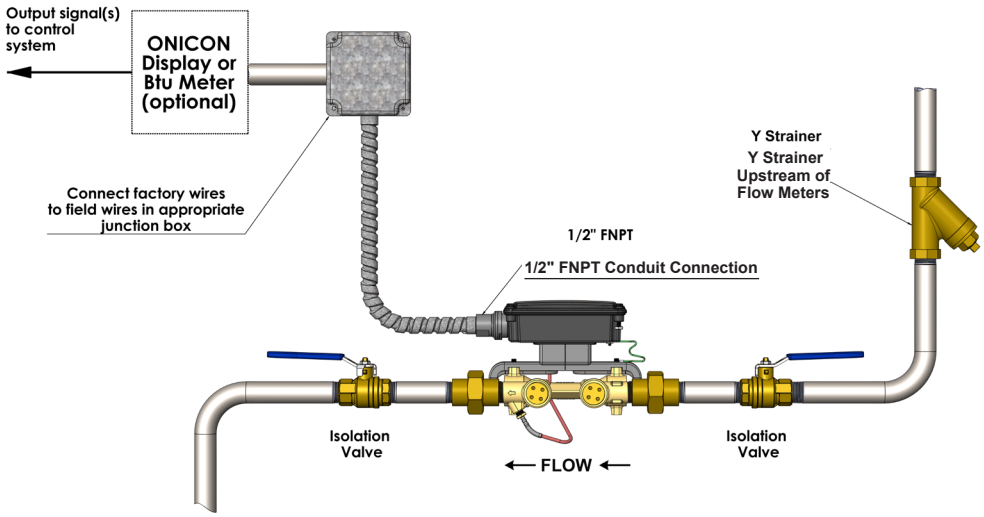

FT-4600 Wiring Information		
Wire Color	**Description**	**Notes**
Red	(+) 24V AC/DC	Positive (+) supply connection
Black	(-) Common ground	Negative (-) supply connection
Blue	(+) Analog 4-20 mA signal	Active 4-20 mA (non-isolated) output* See Sec 3.4 for changing to Volt output.
Brown	(-) Analog 4-20 mA signal	
Orange	Non polarized dry contact switch output	Scaled to provide one pulse per unit volume
White		
Silver	Earth Ground Connection	Connection to Earth Ground

*4-20 mA signal is active. Do not connect external voltage to the blue & brown wires.

FT-4600 WIRING DIAGRAM

Flow meter into control system (no display or BTU meter)

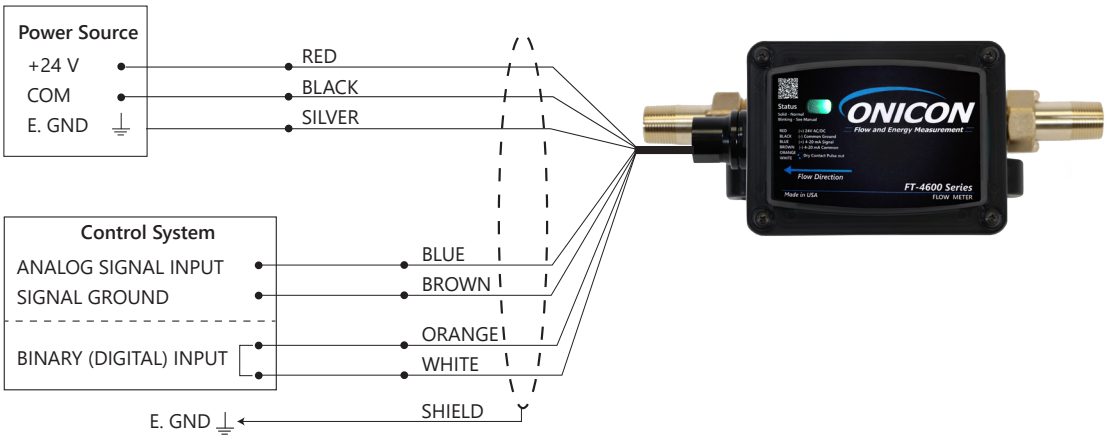

3.4 INTERNAL WIRING AND CONTROLS

The FT-4600 comes pre-wired from the factory and internal wiring is not required for install / commissioning. The circuit board image below is provided for service activities and reference.

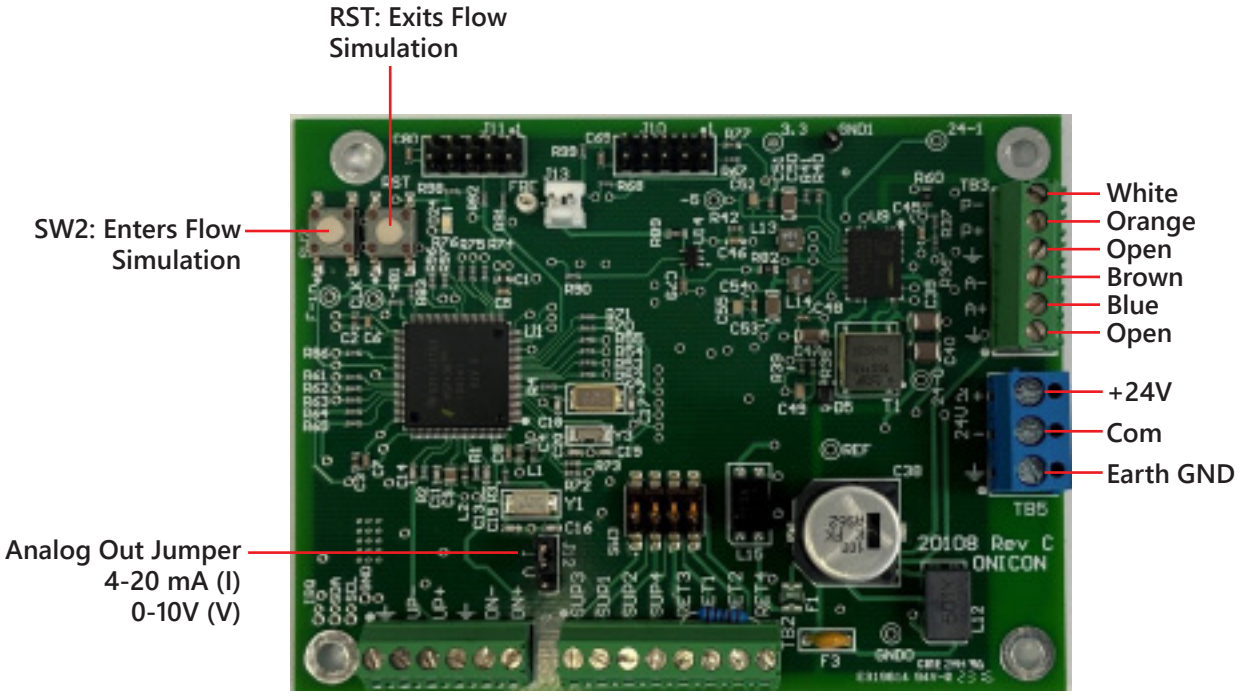

Move jumper J12 to change analog output from 4-20mA ("I") (default) and 0-10V ("V"). 0-5V output is in development and will require a utility and adapter.

SECTION 4.0 DIAGNOSTICS

4.1 FLOW SIMULATION

For flow simulation, press and hold the SW2 button. The flow meter will enter simulation mode. The meter will simulate 16mA and it will pulse accordingly. Press the RST button to exit simulation mode

4.2 LED STATUS

When active, a fast flash pattern gets your attention. Then each active code is counted out with a pause between codes. This pattern repeats while any alarms are active.

LED BEHAVIOR	STATUS	NEXT STEP
No LED	Meter off or dead	Check whether the meter is receiving 24VAC or DC. Check that the power supply can provide enough current to all connected devices. If the power is correct, the meter board needs to be replaced.
Solid LED	Good	No action is needed. Meter is reading flow properly.
1 blink	Blink Unused	Blink Unused
2 blinks	Signal Issue	Ensure meter is oriented properly. Check page 10-12.
3 blinks	Reverse Flow	Ensure the arrow on the meter body is pointed in the direction of the flow.
4 blinks	Temperature or Flow Limits	Ensure the meter does not exceed the limits indicated on page 5. The meter will send a 4mA signal when the flow or temperature is outside of its limits.
5 blinks	High Temp Exceeded	If the meter has an alarm for a functional issue, this alarm will also blink on the LED if the meter has ever seen a temperature over 250°F during its service life. This is informative to assist in troubleshooting and is not necessarily the cause of the functional issue. This type of over temperature condition can be caused by a steam trap failure or other mechanical system issue.
6 blinks	Hardware Fault	Board or sensor failure. Please contact ONICON to determine where the failure is.
7 blinks	Config Fault	Bad config or corrupt flash/EEPROM. Contact ONICON.

NOTE: The meter will go to 4mA for 4-20mA output, or 0V for 0-10V if any errors are present.

4.3 FLUID TYPE

Incorrect fluid type (water, water/glycol, or glycol%) will affect the meters ability to read properly and in some cases prevent the meter from producing any readings. If you are seeing incorrect, unexpected or no flow rates, verify that the fluid in the system matches the fluid type that the meter was calibrated for. These settings are factory programmed for each meter and require an ONICON rep to adjust in the field in the event of a major change to the system.