F-4600
INLINE ULTRASONIC FLOW METER

ONICON F-4600 Inline Ultrasonic Flow Meters are a cost effective solution to accurate, reliable flow measurement for a variety of applications.

• Chilled Water • Hot Water • Steam Condensate •
• Domestic Water • Condenser Water • Water/Glycol Solutions •
• Process Application Water Flow •

We believe in our products, so should you.
1 YEAR NO FAULT WARRANTY
3 YEAR MANUFACTURER WARRANTY

Engineered • Wet Calibrated • Factory Configured

Measure with Confidence

No-Fault Warranty • On-Time Delivery • Customer Support

FEATURES

Reliable No-Moving-Parts Design - Wetted transducers measure the ultrasonic signal transit time differential, which correlates directly to the flow rate. The direct beam path orientation significantly enhances signal strength and long term reliability.

Highly Accurate Over a Wide Flow Range - The flow sensor is accurate to within ±1% of reading over the normal (25:1 turndown) operating range and within ±2% of reading over an extended (100:1 turndown) range.

User Friendly Backlit Display and User Interface - The bright, easy-to-read, backlit display uses smart button technology to simplify page navigation and programming. This eliminates the need for special configuration tools.

Detachable Display - The F-4600 user interface display is easily detached from the flow sensor. This allows for remote mount installation up to 5ft from the sensor body.

Built-in Interval Data Logger - Volume totals are date/time stamped and logged within the meter along with other analytical data. This data is available via BACnet® or MODBUS®.

CALIBRATION

Each F-4600 is subjected to a comprehensive series of conformance tests which ensures that each meter is fully functional and meets the published performance and accuracy specifications. The absolute accuracy of conformance test equipment is directly traceable to NIST*. A certificate of conformance is provided.

APPROVALS

- FCC: Part 15, Subpart B
- ANSI/NSF 61 & 372
- BTL Certified to ASHRAE 135:2009

METER DESIGN DETAILS

Meter Size	Process Connection Type	Typical Design Flow	Minimum Flow	Flow @ Max Analog Output	1% of Rate Flow Range	2% of Rate Flow Range	C_v	Volume per Pulse	Length with Fittings
(Nominal Size)		(gpm)	(gpm)	(gpm)	(gpm)	(gpm)		(gal)	(in)
½″	Male NPT	6.6	0.03	15	0.6 - 15	0.15 - 0.6	6.08	1	11.2
¾″	Male NPT	6.6	0.03	15	0.6 - 15	0.15 - 0.6	6.08	1	11.7
¾″ (Hi-Flow)	Male NPT	11.0	0.05	25	1.0 - 25	0.25 - 1.0	8.81	1	11.7
1″	Male NPT	11.0	0.05	25	1.0 - 25	0.25 - 1.0	8.81	10	12.3
1″ (Hi-Flow)	Male NPT	15.4	0.07	35	1.4 - 35	0.35 - 1.4	12.17	10	15.0
1¼″	Male NPT	26.4	0.12	60	3 - 60	0.6 - 3	36.95	10	15.3
1½″	Male NPT	44.0	0.20	100	5 - 100	1.0 - 5	51.20	10	17.0
2″	Male NPT	66.0	0.30	150	8 - 150	1.5 - 8	101.20	10	17.6
2½″	Class 150 Flange	110.0	0.50	250	12 - 225	2.5 - 12 & 225 - 250	156.20	10	11.8

*National Institute of Standards and Technology

SPECIFICATIONS*

ACCURACY	±1% of reading over 25:1 turndown ±2% of reading over 100:1 turndown Repeatability: ≤± 0.2%
OVERALL FLOW RANGE	500:1 turndown
SENSING METHOD	Direct beam path wetted ultrasonic sensors utilizing differential transit time velocity measurement
METER SIZES	½ - 2½" nominal diameter
PIPING SYSTEM CONNECTIONS	Male NPT threads 2½" meter provided with ANSI Class 150 raised face flanges
FLUID TEMPERATURE RANGE	32°F to 250°F
AMBIENT TEMPERATURE RANGE	-13°F to 131°F
MAXIMUM OPERATING PRESSURE	400 psi
PRESSURE DROP	Less than 1 psi at 4 ft/s, decreasing at lower velocities
POWER SUPPLY REQUIREMENTS	20-28V AC/DC; 50/60 Hz, 5 VA maximum
ANALOG OUTPUT	May be programmed for flow rate or temperature Configurable as 4-20mA (non-isolated) Optional 0-5 V or 0-10 V output
ISOLATED TOTALIZING SOLID STATE CONTACT CLOSURE PULSE OUTPUTS	May be programmed for volume, alarm indication or MODBUS coil indication. Contact ratings: 50mA, 30 VDC maximum Contact Pulse duration: 1000 ms Optional: Contact pulse duration; 50, 100, or 500 ms
ISOLATED TOTALIZING PULSE INPUTS (OPTIONAL)	For use with sinking open collector or dry contact outputs Input rating: 30 VDC, 10 mA maximum Pulse duration: 50 ms minimum
NETWORK CONNECTIONS (Optional)	Isolated RS485 serial interface
COMMUNICATIONS PROTOCOLS (Optional)	BACnet MS/TP per ASHRAE Standard 135.1:2009 MODBUS RTU
ELECTRONICS ENCLOSURE	IP65 Polycarbonate with Display
WETTED COMPONENTS	Lead Free Brass, PEEK

BACnet® / MODBUS® Data	
Name	**Description**
Volume	Rate / Total / Y-T-D Total / Prev. Yr. Total / User Resettable Total
Temperature	Supply Temp
Diagnostics	Meter Status / Signal Strength / Signal Quality / Speed of Sound
Trend Data	Volume Total / Meter Status

The F-4600 features an IP65 enclosure. Field wiring connections are made to internal terminal blocks through the 4 cable glands provided.

* SPECIFICATIONS subject to change without notice.

F-4600
INLINE ULTRASONIC FLOW METER

TYPICAL F-4600 INSTALLATION

(Meter should be installed on return line for best performance but can be field configured for install on the supply line.)

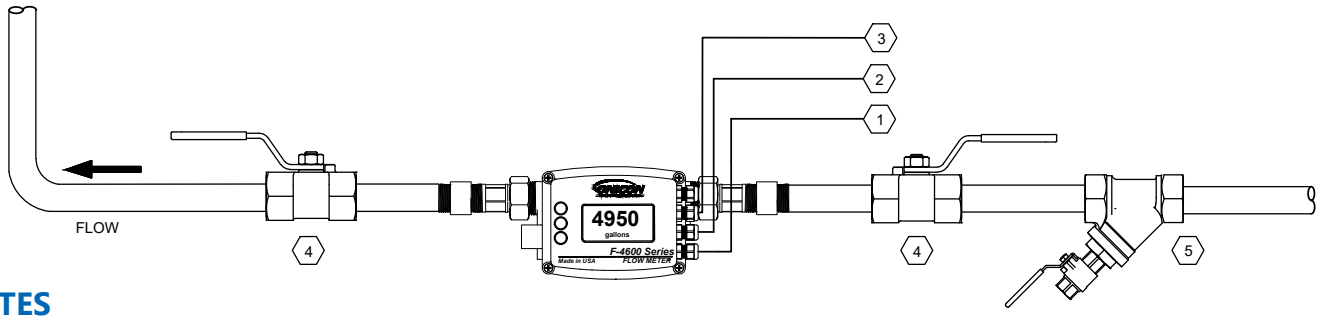

NOTES

1. **Input Power**
   20-28V AC/DC, 5 VA maximum
2. **Input and output signals**
   Three (3) auxiliary signals can be configured as pulse inputs / outputs or as an analog output
3. **RS485 BACnet or MODBUS**
4. **Isolation valves**
5. **Y strainer upstream of flow meter**

METER ORDERING INFORMATION

Meter Model Number Coding = F-4600-AAA-BCD-EF-(SPC)

F-4600 = Inline Ultrasonic Flow Meter

AAA = Nominal Meter Size in Inches

050 = ½	130 = 1¼"
340 = ¾"	150 = 1½"
341 = ¾" High Flow	020 = 2"
010 = 1"	250 = 2½"
011 = 1" High Flow	

B = Process Connection Type

0 = NPT Threads

1 = ANSI Class 150 Flange (Required for 2.5" meter. NOT available on ½" to 2" meters)

C = Display / Interface

1 = IP65 Enclosure, Detachable Backlit LCD Display/ Interface with Mounting Bracket

D = Input Power

0 = 24 V AC/DC

E = Serial Communications

1 = RS485 (BACnet MS/TP or MODBUS RTU)

F = Analog & Pulse Input/Output Configuration

6 = One (1) Pulse Input, One (1) Pulse Output & One (1) Analog Output

SPC = Special Configuration

NOTES:

If AAA = 250, Process Connection Type *MUST* = 1 (ANSI 150)

ONICON
Flow and Energy Measurement